Pb Process Capable

RoHS Compliant 2002/95/EC

REV.	ECN. NO.	APPD.

DIMENSIONS

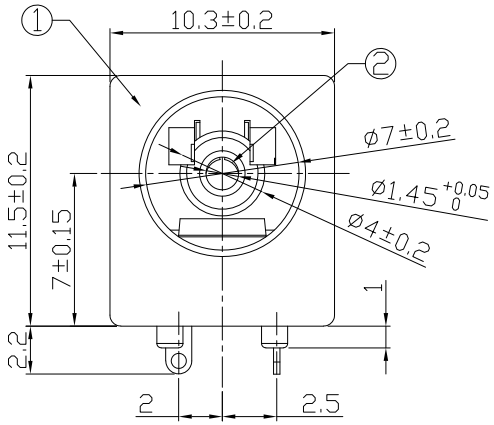

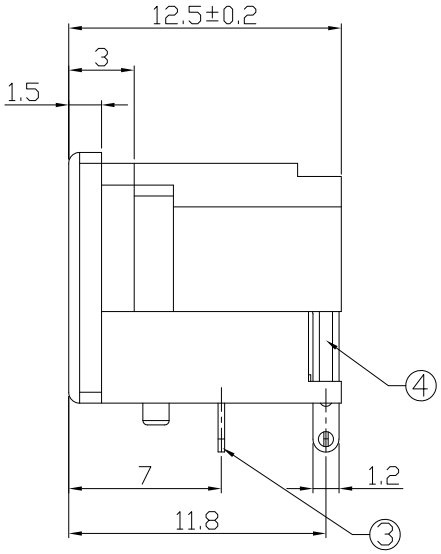

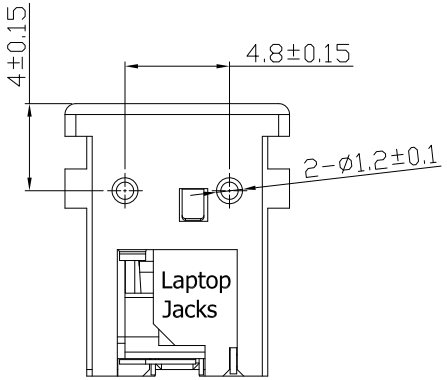

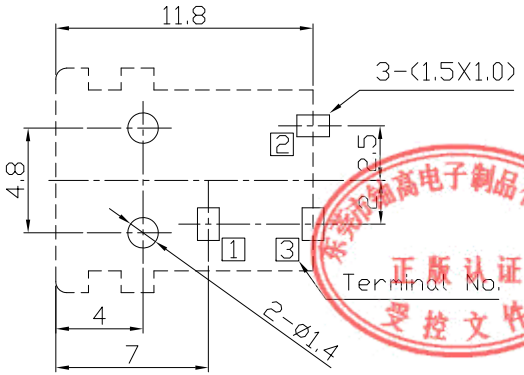

Recommended PCB Layout
Tolerance±0.05
(Printed-sided View)

MODEL CODE:

DCB0-0029A- A F 66 BK S 0 4
(1) (2) (3)(4)(5) (6) (7)(8) (9)

(1):Series type:DIP DC POWER JACK.
(2):Series No.
(3):Schematic option: A , B
(4):Center pin diameter:
F=ø1.45
(5):Material of housing:
PB=PBT 66=PA66
(6):Housing color:
BK=Black (Standard)
(7):Terminal plating
S=Silver(Ag)
(8):Special option:
0=No special option
(9):Packing mode:
4=Bag packing

SPECIFICATION:

1.Rating : DC 20V 2.5A;
2.Contact resistance: ≤30mΩ;
After test:≤50mΩ
3.Insulation resistance: ≥100MΩ (DC500V);
After test:≥50MΩ
4.Withstand voltage: 500VAC ;
5.Insertion and extraction force: 3-30N;
6.life test: 5,000 cycles;
7.Operation temperature range:-20°C~70°C;
8.Preservative temperature range:-40°C~85°C;

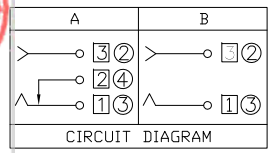

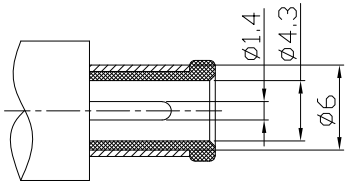

DC MATE PLUG

东莞市铀高电子制品有限公司 正版认证 受控文件

○: ITEM NO. □: TERMINAL NO.

NO.	PARTS	MATERIAL	Q'TY	FINISHING
④	Shunt terminal 2	Brass t=0.3	1	Silver plating
③	Tip spring 1	Phosphor bronze t=0.3	1	Silver plating
②	Center Terminal 3	Phosphor bronze t=0.2	1	Silver plating
①	Housing	PBT/PA66	1	Black

TOLERANCE	ANGLES
±0.3	±2°

THESE DRAWINGS AND SPECIFICATIONS ARE THE PROPERTY OF ACCURATE INNOTECH INC AND SHALL NOT BE REPRODUCED, COPIED OR USED IN ANY MANNER WITHOUT THE PRIOR WRITTEN CONSENT OF ACCURATE INNOTECH INC.

UNITS mm
MAT'L SEE NOTE
FINISH SEE NOTE
Q'TY

东莞市铀高电子制品有限公司

TITLE: DIP DC POWER JACK	PART NO.: DCB0-0029A
DR: Ricky 2019/04/11	DWG NO.: AB0-0029A
CHKD: Ricky 2019/04/11	SCALE 1:1 / SHEET 1/1 / REV. A / CUSTOMER DRAWING
APPD:	