Pb Process Capable

RoHS Compliant 2002/95/EC

| REV. | ECN. NO. | APPD. |
|---|---|---|
| | | |
| | | |
| | | |

## DIMENSIONS

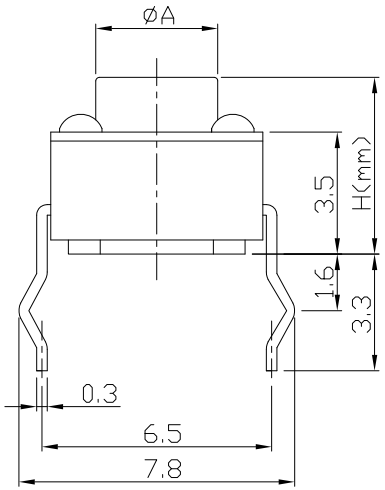


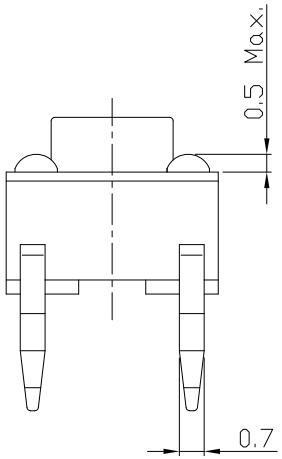


## CIRCUIT DIAGRAM

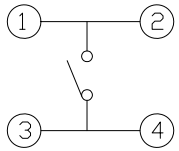


## PRODUCT IMAGE

## MODEL CODE

YT-1102 –

| | H | ØA |
|---|---|---|
| – | 4.3 | 3.5 |
| AS | 4.5 | 3.5 |
| A | 5.0 | 3.5 |
| AL | 5.5 | 3.4 |
| Q | 6.0 | 3.4 |
| QL | 6.5 | 3.4 |
| B | 7.0 | 3.4 |
| E | 7.3 | 3.4 |
| EL | 7.5 | 3.4 |
| C | 8.0 | 3.4 |
| CL | 8.5 | 3.4 |
| DS | 9.0 | 3.4 |
| D | 9.5 | 3.4 |
| DL | 10.0 | 3.0 |
| KS | 10.5 | 3.0 |
| K | 11.0 | 3.0 |
| KL | 11.5 | 3.0 |
| FS | 12.0 | 3.0 |
| F | 12.5 | 3.0 |
| FL | 13.0 | 3.0 |
| G | 13.5 | 3.0 |
| O | 14.0 | 3.0 |
| X | 14.5 | 3.0 |
| Y | 15.0 | 3.0 |
| Z | 16.0 | 3.0 |
| J | 16.3 | 3.0 |
| I | 17.0 | 3.0 |
| T | □2.4X2.4 | |
| TA | □2.8X2.8 | |

## P.C.B MOUNTING PATTERN DIMENSION

The following soldering patterns are recommended for reflow soldering

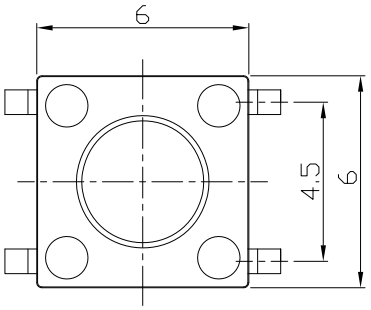


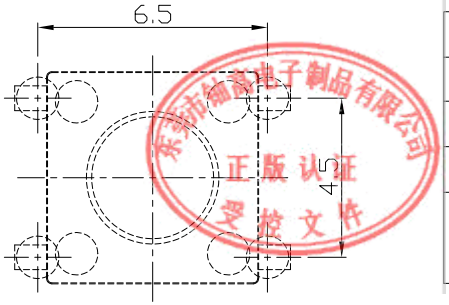


东莞市铀高电子制品有限公司 正版认证 受控文件

## ELECTRO-MECHANICAL CHARACTERISTICS

Refer to additional specifications

| | | |
|---|---|---|
| Rating | DC 12V 50mA | |
| Contact Resistance | 100mΩ Max. | |
| Travel | 0.25 ± 0.1mm | |
| Operating Force | 130,160±30gf | 250±50gf |
| Operating Life(cycles) | 100,000 | Phosphor Bronze |
| | 200,000 | Stainless Steel |

| | | | |
|---|---|---|---|
| .X ±0.3 | X. ±2° | UNITS mm | 东莞市铀高电子制品有限公司 |
| | | MAT'L SEE NOTE | TITLE: TACT SWITCH / PART NO.: YT-1102 |
| | | FINISH SEE NOTE | DR: Ricky 2014/03/18 / DWG NO.: ASI-1102 |
| | | Q'TY | CHKD: Ricky 2014/03/18 |
| | | | APPD: |

SCALE 1:1 | SHEET 1/1 | REV. A | CUSTOMER DRAWING

THESE DRAWINGS AND SPECIFICATIONS ARE THE PROPERTY OF ACCURATE INNOTECH INC AND SHALL NOT BE REPRODUCED, COPIED OR USED IN ANY MANNER WITHOUT THE PRIOR WRITTEN CONSENT OF ACCURATE INNOTECH INC.