Pb Process Capable

RoHS Compliant 2002/95/EC

REV.	ECN. NO.	APPD.

DIMENSIONS

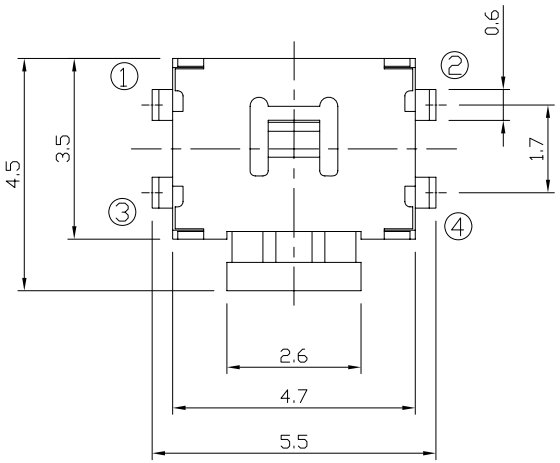

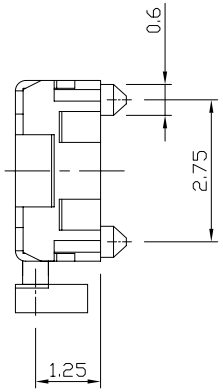

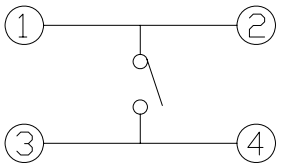

CIRCUIT DIAGRAM

P.C.B MOUNTING PATTERN DIMENSION

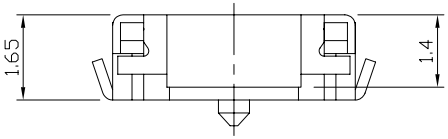

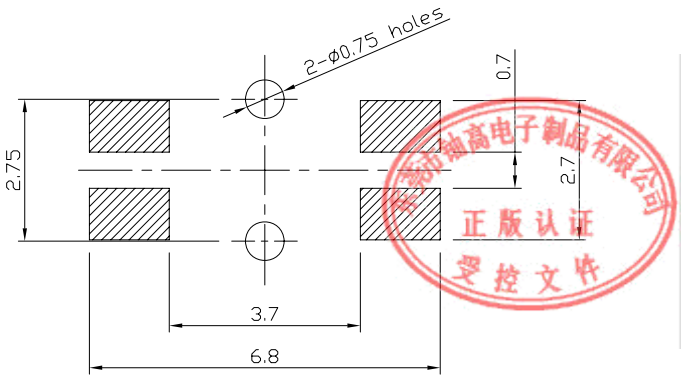

东莞市铀高电子制品有限公司 正版认证 受控文件

ELECTRO-MECHANICAL CHARACTERISTICS

Refer to additional specifications

RATING	DC12V 50mA
CONTACT RESISTANCE	100mΩ MAX.
TRAVEL	0.3±0.1mm
OPERATING FORCE	220±50gf
OPERATING LIFE(cycles)	100,000

NO.	PARTS	MATERIAL	Q'TY	FINISHING
8				
7				
6				
5				
4				
3				
2				
1				

.X ±0.3 | X. ±3°

UNITS mm

MAT'L SEE NOTE

FINISH SEE NOTE

Q'TY

THESE DRAWINGS AND SPECIFICATIONS ARE THE PROPERTY OF ACCURATE INNOTECH INC AND SHALL NOT BE REPRODUCED, COPIED OR USED IN ANY MANNER WITHOUT THE PRIOR WRITTEN CONSENT OF ACCURATE INNOTECH INC.

东莞市铀高电子制品有限公司

TITLE: TACT SWITCH

PART NO.: YT-1189UE

DR: Ricky 2015/05/07

DWG NO.: AKS-1189UE

CHKD: Ricky 2015/05/07

APPD:

SCALE	SHEET	REV.	CUSTOMER DRAWING
1:1	1/1	A	