Process Capable

RoHS Compliant 2002/95/EC

REV.	ECN. NO.	APPD.

DIMENSIONS

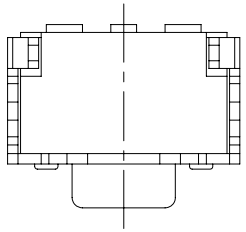

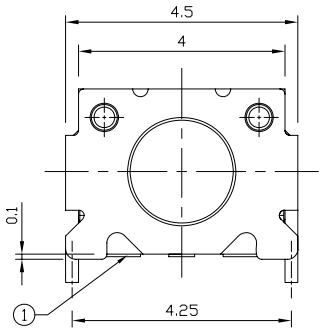

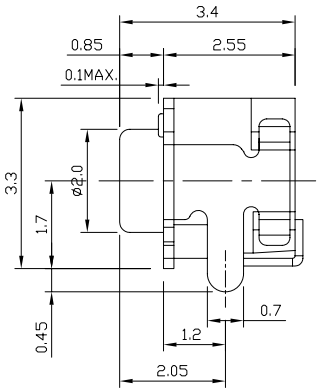

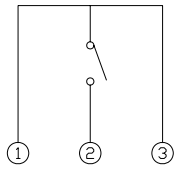

CIRCUIT DIAGRAM

P.C.B MOUNTING PATTERN DIMENSION

(ALL TOLERANCE:±0.05)

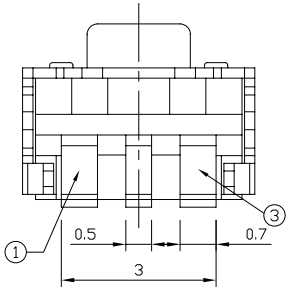

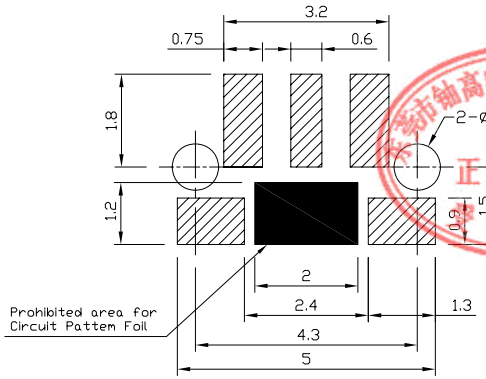

ELECTRO-MECHANICAL CHARACTERISTICS

Refer to additional specifications

RATING	DC12V 20mA
CONTACT RESISTANCE	100mΩ MAX.
TRAVEL	0.2±0.08mm
OPERATING FORCE	160±30gf
OPERATING LIFE(cycles)	100,000

东莞市铀高电子制品有限公司 正版认证 控文件

NO.	PARTS	MATERIAL	Q'TY	FINISHING
8				
7				
6				
5				
4				
3				
2				
1				

.X ±0.05	X. ±1°	UNITS mm	东莞市铀高电子制品有限公司
		MAT'L SEE NOTE	TITLE: TACT SWITCH / PART NO.: YT-1191
		FINISH SEE NOTE	DR: Ricky 2015/05/11 / DWG NO.: AKS-1191
		Q'TY	CHKD: Ricky 2015/05/11
			APPD:

THESE DRAWINGS AND SPECIFICATIONS ARE THE PROPERTY OF ACCURATE INNOTECH INC AND SHALL NOT BE REPRODUCED, COPIED OR USED IN ANY MANNER WITHOUT THE PRIOR WRITTEN CONSENT OF ACCURATE INNOTECH INC.

SCALE	SHEET	REV.	
1:1	1/1	A	CUSTOMER DRAWING