Pb Process Capable

RoHS Compliant 2002/95/EC

REV.	ECN. NO.	APPD.

DIMENSIONS

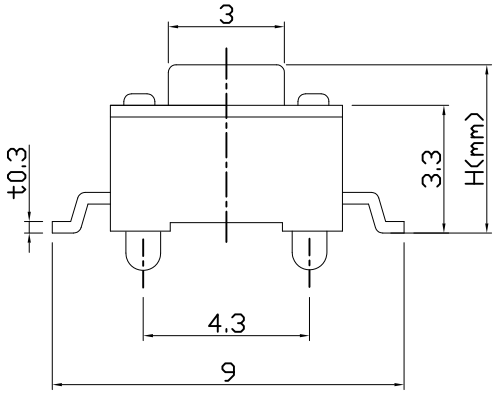

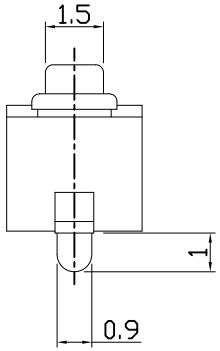

CIRCUIT DIAGRAM

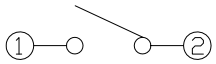

PRODUCT IMAGE

MODEL CODE

YT-1101S9 –

	H	9
–	4.3	
A	5.0	

P.C.B MOUNTING PATTERN DIMENSION

The following soldering patterns are recommended for reflow soldering

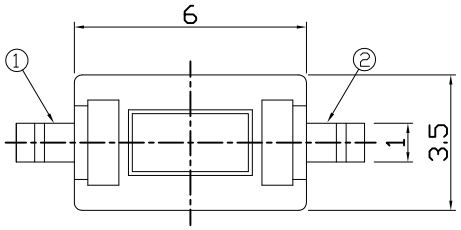

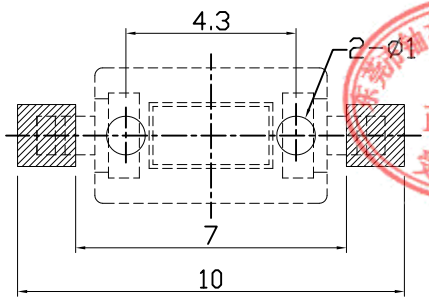

东莞市铀高电子制品有限公司 正版认证 受控文件

ELECTRO-MECHANICAL CHARACTERISTICS

Refer to additional specifications

Rating	DC 12V 50mA		
Contact Resistance	100mΩ Max.		
Travel	0.25 ± 0.1mm		
Operating Force	160,180±30gf	250±50gf	520±100gf
Operating Life(cycles)	50,000	30,000	10,000

.X ±0.2	X. ±2°	UNITS mm	东莞市铀高电子制品有限公司
		MAT'L SEE NOTE	TITLE: TACT SWITCH / PART NO.: YT-1101S9
		FINISH SEE NOTE	DR: Ricky 2014/03/25 / DWG NO.: ASI-1101S
		Q'TY	CHKD: Ricky 2014/03/25
			APPD:

SCALE 1:1 | SHEET 1/1 | REV. A | CUSTOMER DRAWING

THESE DRAWINGS AND SPECIFICATIONS ARE THE PROPERTY OF ACCURATE INNOTECH INC AND SHALL NOT BE REPRODUCED, COPIED OR USED IN ANY MANNER WITHOUT THE PRIOR WRITTEN CONSENT OF ACCURATE INNOTECH INC.