Pb Process Capable

RoHS Compliant 2002/95/EC

REV.	ECN. NO.	APPD.

DIMENSIONS

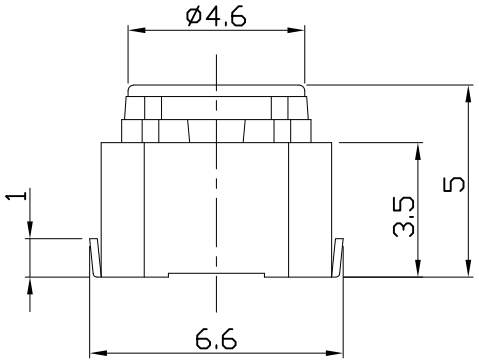

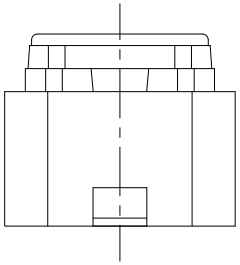

CIRCUIT DIAGRAM

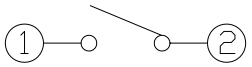

PRODUCT IMAGE

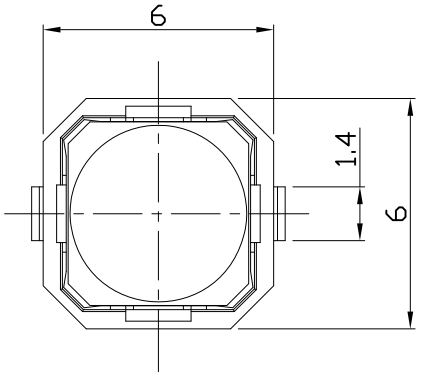

P.C.B MOUNTING PATTERN DIMENSION

The following soldering patterns are recommended for reflow soldering

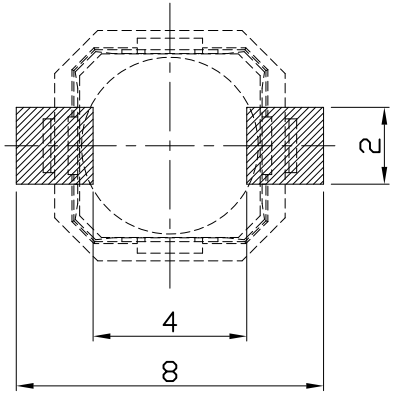

ELECTRO-MECHANICAL CHARACTERISTICS

Refer to additional specifications

Rating	DC 12V 0.1A
Contact Resistance	100mΩ Max.
Insulation Resistance	100MΩ(DC 500V / 1 min) Min.
Withstanding Voltage	250 VAC / min.
Travel	1.3 ± 0.3mm
Operating Force	250±70gf
Operating Life(cycles)	100,000

东莞市铀高电子制品有限公司 正版认证 受控文件

.X ±0.3	X. ±2°	UNITS mm	东莞市铀高电子制品有限公司
		MAT'L SEE NOTE	TITLE: TACT SWITCH Soft feeling / PART NO.: AT-1190 SERIES
		FINISH SEE NOTE	DR: Ricky 2014/04/01 / DWG NO.: ASI-1190
		Q'TY	CHKD: Ricky 2014/04/01
			APPD:

SCALE 1:1 | SHEET 1/1 | REV. A | CUSTOMER DRAWING

THESE DRAWINGS AND SPECIFICATIONS ARE THE PROPERTY OF ACCURATE INNOTECH INC AND SHALL NOT BE REPRODUCED, COPIED OR USED IN ANY MANNER WITHOUT THE PRIOR WRITTEN CONSENT OF ACCURATE INNOTECH INC.