Process Capable

RoHS Compliant 2002/95/EC

REV.	ECN. NO.	APPD.

DIMENSIONS

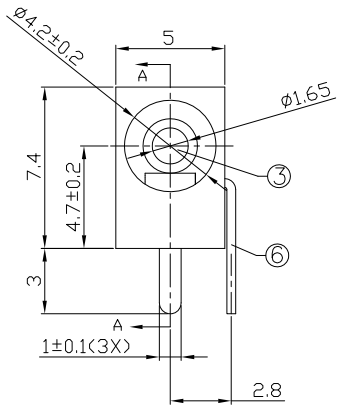

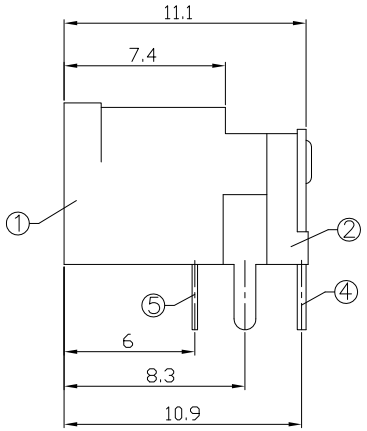

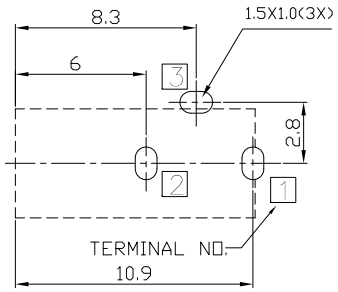

RECOMMENDED P.C.B. LAYOUT
UNSPECIFIED TOLERANCE:±0.05
(BOTTOM VIEW)

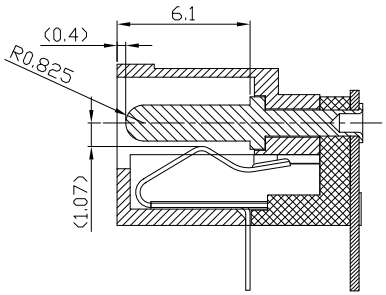

SECTION A-A

MODEL CODE:

DCB0-0002D- A G PB BK S 0 4

(1) (2) (3)(4)(5) (6) (7)(8) (9)

(1):Series type:DIP DC POWER JACK.
(2):Series No.
(3):Schematic option: A , B
(4):Center pin diameter:
G=Ø1.65
(5):Material of housing:
PB=PBT , 46=PA46
(6):Housing color:
BK=Black (Standard)
(7):Terminal plating
S=Silver(Ag)
(8):Special option:
0=No special opion
(9):Packing mode:
4=Bag packing

Specification:
1.Rating : DC 12V 2A.
2.Contact resistance: ≤30mΩ
After test:≤50mΩ
3.Insulation resistance: ≥100MΩ (500VDC).
After test:≥50MΩ
4.Withstanding voltage: 500VAC.
5.Insertion and extraction force: 3N~30N.
6.life test: 5000cycles min.
7.Operation temperature range:-20℃~70℃
8.Preservative temperature range:-40℃~85℃

东莞市铀高电子制品有限公司
正版认证
受控文件

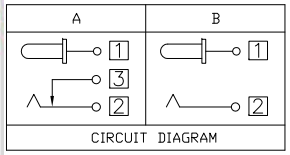

CIRCUIT DIAGRAM

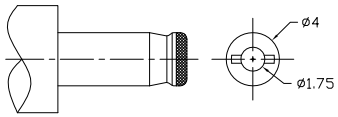

DC MATE PLUG

○: ITEM NO. □: TERMINAL NO.

NO.	PARTS	MATERIAL	Q'TY	FINISHING
⑥	Shunt terminal 3	Brass t=0.4	1	Silver Plating
⑤	Tip spring 2	Stainless steel t=0.2	1	Silver Plating
④	Center pin terminal 1	Brass t=0.4	1	Silver Plating
③	Center pin 1	Brass	1	CuSn/Nickel plating
②	Cover	PBT/PA46,UL 94V-0	1	Black
①	Housing	PBT/PA46,UL 94V-0	1	Black

TOLERANCE	ANGLES
±0.3	±2°

THESE DRAWINGS AND SPECIFICATIONS ARE THE PROPERTY OF ACCURATE INNOTECH INC AND SHALL NOT BE REPRODUCED, COPIED OR USED IN ANY MANNER WITHOUT THE PRIOR WRITTEN CONSENT OF ACCURATE INNOTECH INC.

UNITS mm
MAT'L SEE NOTE
FINISH SEE NOTE
Q'TY

东莞市铀高电子制品有限公司

TITLE: DIP DC POWER JACK	PART NO.: DCB0-0002D
DR: Ricky 2019/03/04	DWG NO.: AB0-0002D
CHKD: Ricky 2019/03/04	
APPD:	

SCALE	SHEET	REV.	CUSTOMER DRAWING
1:1	1/1	A	