Process Capable

RoHS Compliant 2002/95/EC

REV.	ECN. NO.	APPD.

DIMENSIONS

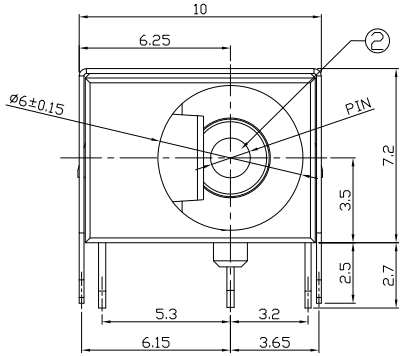

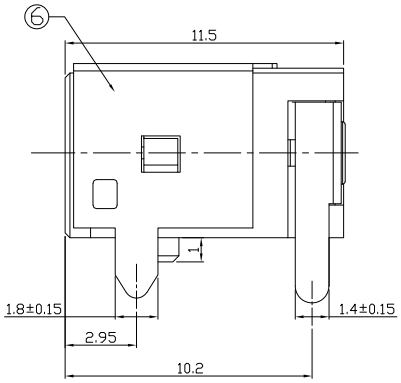

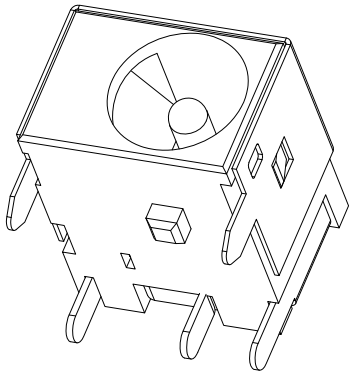

MODEL CODE:

DCB0-0044J- A □ PB BK S 0 4

(1) (2) (3)(4) (5) (6) (7)(8) (9)

(1):Series type:DIP DC POWER JACK.
(2):Series No.
(3):Schematic option: A , B
(4):Center pin diameter:
G=Ø1.65 , H=Ø2.0 , J=Ø2.5
(5):Material of housing:
PB=PBT(Standard) , 9T=PA9T
(6):Housing color:
BK=Black (Only)
(7):Terminal plating
S=Silver(Ag) (Standard)
T=Tin(Sn)
G=Gold(Au)
(8):Special option:
0=No special opion
(9):Packing mode:
1=Reel packing
4=Bag packing

SPECIFICATION:
1.Rating : DC 25V 3.0A;
2.Contact resistance: ≤50mΩ;
After test:≤100mΩ
3.Insulation resistance: ≥100MΩ (DC250V);
After test:≥50MΩ
4.Withstand voltage: 500VAC ;
5.Insertion and extraction force: 3-30N;
6.life test: 5,000 cycles;
7.Operation temperature range:-20°C~70°C;
8.Preservative temperature range:-40°C~85°C;

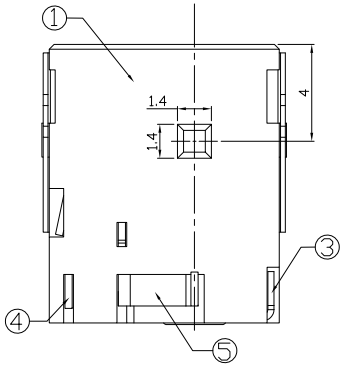

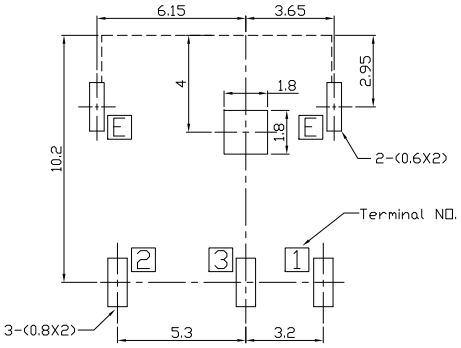

P.C.B Layout
(Copper-sided view)

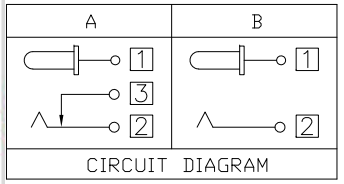

CIRCUIT DIAGRAM

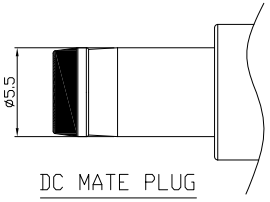

DC MATE PLUG

Model No.	G	H	J
CENTER PIN	Ø1.65	Ø2.0	Ø2.5

东莞市铀高电子制品有限公司
正版认证
受控文件

○: ITEM NO. □: TERMINAL NO.

NO.	PARTS	MATERIAL	Q'TY	FINISHING
⑥	Earth terminal E	Phosphor bronze	1	Ni-Plating
⑤	Shunt terminal 3	Brass	1	Ag-Plating
④	Tip spring 2	Phosphor bronze	1	Ag-Plating
③	Center pin contact 1	Brass	1	Ag-Plating
②	Center pin 1	Brass	1	Ni-Plating
①	Housing	PBT/PA9T	1	

TOLERANCE	ANGLES
±0.3	±2°

THESE DRAWINGS AND SPECIFICATIONS ARE THE PROPERTY OF ACCURATE INNOTECH INC AND SHALL NOT BE REPRODUCED, COPIED OR USED IN ANY MANNER WITHOUT THE PRIOR WRITTEN CONSENT OF ACCURATE INNOTECH INC.

UNITS mm
MAT'L SEE NOTE
FINISH SEE NOTE
Q'TY

东莞市铀高电子制品有限公司

TITLE: DIP DC POWER JACK		PART NO.: DCB0-0044J	
DR: Ricky 2019/04/29		DWG NO.: AB0-0044J	
CHKD: Ricky 2019/04/29			
APPD:	SCALE 1:1	SHEET 1/1	REV. A	CUSTOMER DRAWING