Pb Process Capable

RoHS Compliant 2002/95/EC

REV.	ECN. NO.	APPD.

DIMENSIONS

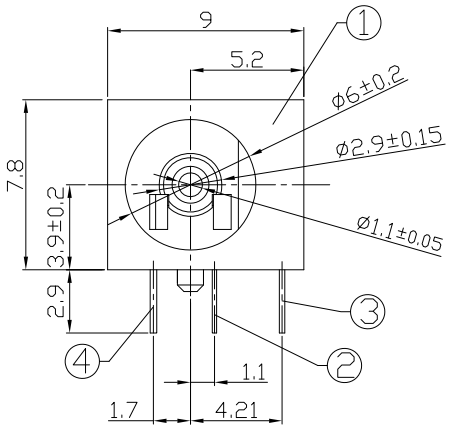

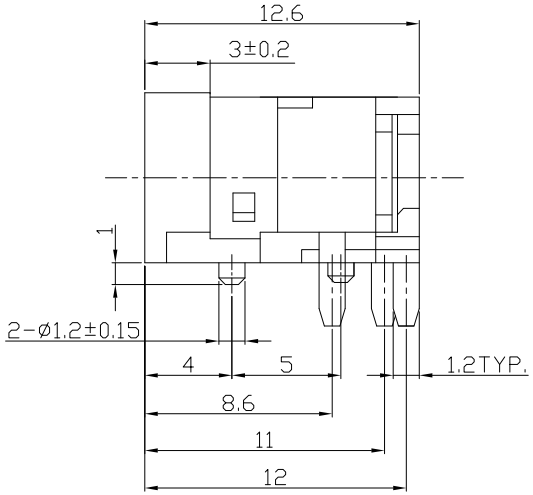

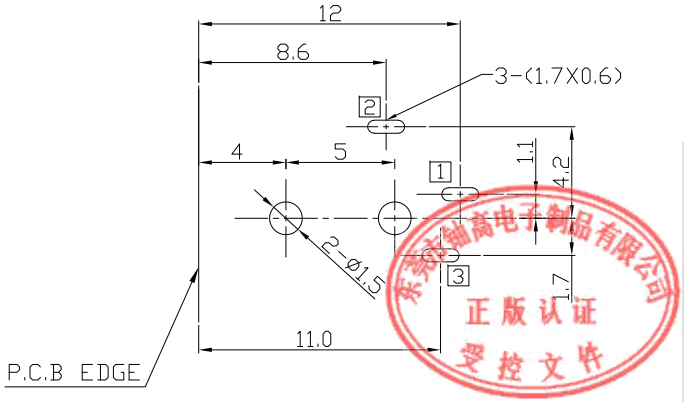

PCB HOLES(BOTTOM VIEW) t=1.6mm

NOTE:GENERAL TOLERANCE:±0.05mm

东莞市铀高电子制品有限公司 正版认证 受控文件

○: ITEM NO. □: TERMINAL NO.

MODEL CODE:

DCB0-00910- A D PB BK S 0 4

(1) (2) (3)(4)(5) (6) (7)(8) (9)

(1):Series type:DIP DC POWER JACK.
(2):Series No.
(3):Schematic option: A , B
(4):Center pin diameter:
D=ø1.1
(5):Material of housing:
PB=PBT
(6):Housing color:
BK=Black (Standard)
4A=Yellow(XH-1223)=PBT4815
(7):Terminal plating
S=Silver(Ag)
(8):Special option:
0=No special option
(9):Packing mode:
4=Bag packing

SPECIFICATION:

1.Rating : DC 30V 4A;
2.Contact resistance: ≤30mΩ;
After test:≤50mΩ
3.Insulation resistance: ≥100MΩ (DC500V);
After test:≥50MΩ
4.Withstand voltage: 500VAC ;
5.Insertion and extraction force: 3-30N;
6.life test: 5,000 cycles;
7.Operation temperature range:-20°C~70°C;
8.Preservative temperature range:-40°C~85°C;

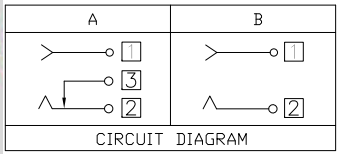

CIRCUIT DIAGRAM

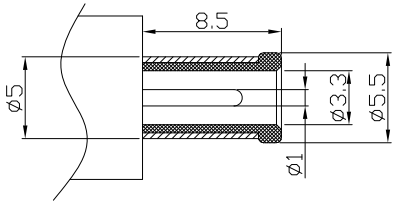

DC MATE PLUG

NO.	PARTS	MATERIAL	Q'TY	FINISHING
④	Shunt terminal [3]	Brass t=0.3	1	Silver plating
③	Tip spring [2]	Phosphor bronze t=0.25	1	Silver plating
②	Center pin [1]	Phosphor bronze t=0.2	1	Silver plating
①	Housing	PBT+15%GF UL94V-0	1	Black

TOLERANCE	ANGLES
±0.3	±2°

UNITS mm

MAT'L SEE NOTE

FINISH SEE NOTE

Q'TY

THESE DRAWINGS AND SPECIFICATIONS ARE THE PROPERTY OF ACCURATE INNOTECH INC AND SHALL NOT BE REPRODUCED, COPIED OR USED IN ANY MANNER WITHOUT THE PRIOR WRITTEN CONSENT OF ACCURATE INNOTECH INC.

东莞市铀高电子制品有限公司

TITLE: DIP DC POWER JACK	PART NO.: DCB0-00910
DR: Ricky 2019/05/03	DWG NO.: AB0-00910
CHKD: Ricky 2019/05/03	SCALE 1:1 / SHEET 1/1 / REV. A / CUSTOMER DRAWING
APPD:	