REV.	ECN. NO.	APPD.

Pb Process Capable

RoHS Compliant 2002/95/EC

Halogen Free

DIMENSIONS

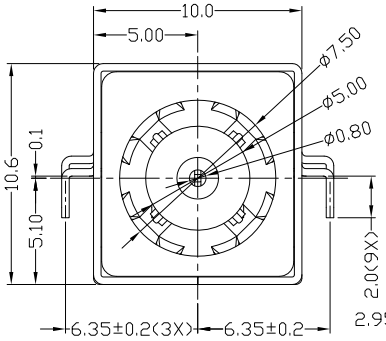

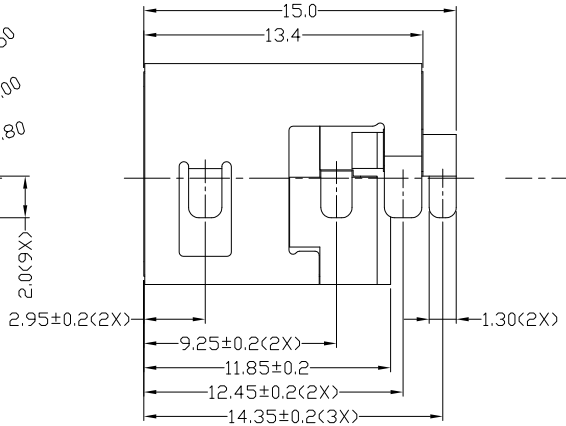

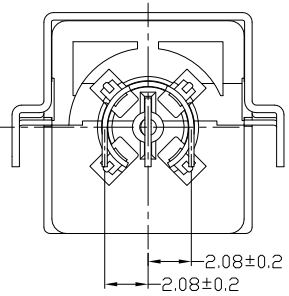

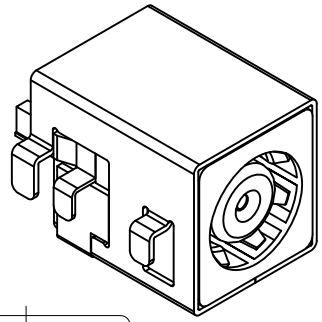

MODEL CODE:

DCT0-089DHS- W M 10 BK G 0 1

(1) (2) (3)(4)(5) (6) (7)(8) (9)

(1):Series type:SMD DC POWER JACK.
(2):Series No.
(3):Schematic option: W
(4):Center pin diameter:
M=ø0.6mm
(5):Material of housing:
10=PA10T
(6):Housing color:
BK=Black
(7):Terminal plating:
G=Gold(Au)
(8):Special option:
0=No special option
(9):Packing mode:
1=Reel packing

Specification:

1.Rating : 8A/20V DC Max.
2.Contact resistance: ≤30mΩ
After test:≤60mΩ
3.Insulation resistance: ≥100MΩ (DC500V).
After test:≥50MΩ
4.Withstanding voltage: 500VAC.
5.Insertion and extraction force: 0.3~3Kgs..
6.Life test: 5,000cycles min.
7.Operation temperature range:-25℃~85℃.

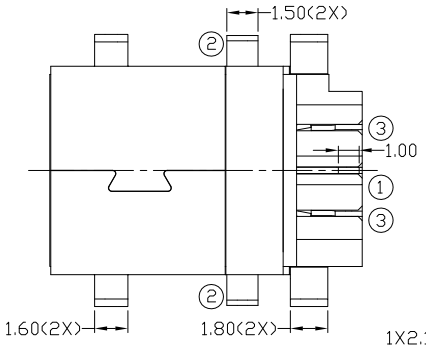

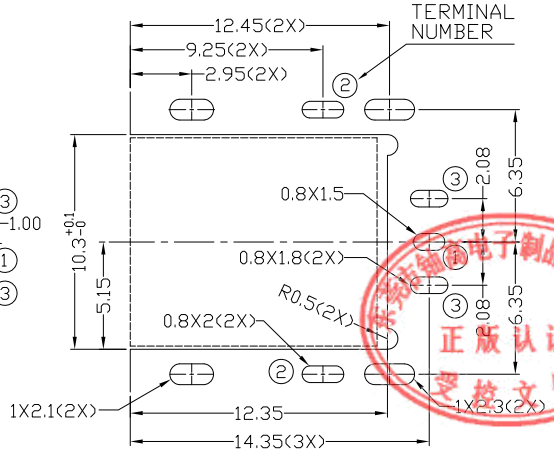

RECOMMENDED P.C.B. LAYOUT
TOLERANCE:±0.05
(TOP VIEW)

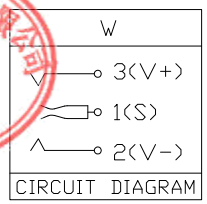

CIRCUIT DIAGRAM

MODEL NO.	M
CENTER PIN	ø0.6mm

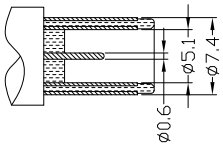

DC MATE PLUG

Bill of materials:

NO.	PARTS	MATERIAL	Q'TY	FINISHING
6	TERMINAL 1	COPPER ALLOY	1	GOLD PLATED
5	TERMINAL 2	COPPER ALLOY	1	GOLD PLATED
4	TERMINAL 3	COPPER ALLOY	1	GOLD PLATED
3	SHIELD	BRASS	1	NICKEL PLATED
2	HOUSING	PA10T	1	UL94V-0
1	COVER	PA10T	1	UL94V-0

TOLERANCE	ANGLES
±0.3	±2°

UNITS mm
MAT'L SEE NOTE
FINISH SEE NOTE
Q'TY

THESE DRAWINGS AND SPECIFICATIONS ARE THE PROPERTY OF ACCURATE INNOTECH INC AND SHALL NOT BE REPRODUCED, COPIED OR USED IN ANY MANNER WITHOUT THE PRIOR WRITTEN CONSENT OF ACCURATE INNOTECH INC.

东莞市铀高电子制品有限公司

TITLE: SMD DC POWER JACK
PART NO.: DCT0-089DHS
DR: Ricky 2018/10/08
DWG NO.: AT0-089DHS
CHKD: Ricky 2018/10/08
APPD:

SCALE	SHEET	REV.	CUSTOMER DRAWING
1:1	1/1	A	

东莞市铀高电子制品有限公司 正版认证 受控文件