REV.	ECN. NO.	APPD.

Pb Process Capable

RoHS Compliant 2002/95/EC

DIMENSIONS

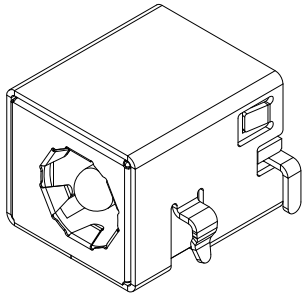

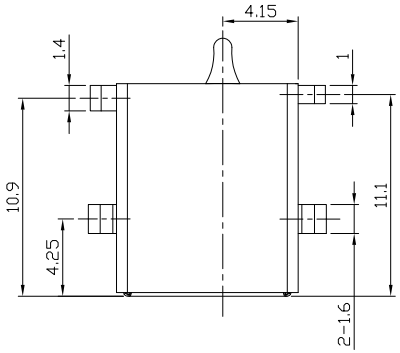

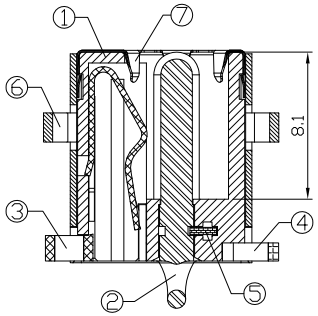

SECTION A-A

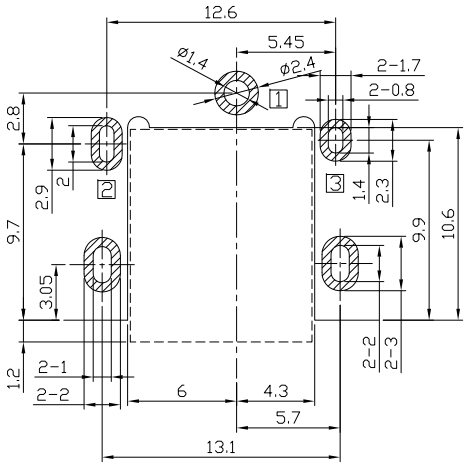

RECOMMENDED P.C.B.LAYOUT
UNSPECIFIED TOLERANCE:±0.05
(COPPER-SIDED VIEW)

MODEL CODE:

DCB0-0116A- A □ 9T BK S 0 1
(1) (2) (3)(4) (5) (6)(7)(8) (9)

(1):Series type:SMD DC POWER JACK.
(2):Series No.
(3):Schematic option: A
(4):Center pin diameter:
G=Ø1.65, H=Ø2.0, J=Ø2.5
(5):Material of housing:
9T=PA9T(Standard),10=PA10T
(6):Housing color:
BK=Black
(7):Terminal plating:
S=Silver(Ag)
(8):Special option:
0=No special option
H=Housing is Halogen Free.
W=White Reel
L=Blue Reel
(9):Packing mode:
1=Reel packing

SPECIFICATION

1.Rating : DC 20V 7A;
2.Contact resistance: ≤30mΩ,
After life test:≤50mΩ;
3.Insulation resistance: ≥100MΩ (DC500V),
After life test:≥50MΩ;
4.Withstand voltage: 500VAC ;
5.Insertion and extraction force: 3-30N;
6.life test: 5,000 cycles;
7.Operation temperature range:-20°C～70°C;
8.Preservative temperature range:-40°C～85°C;

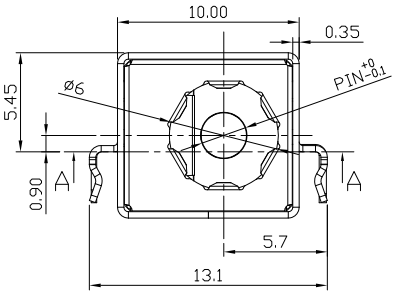

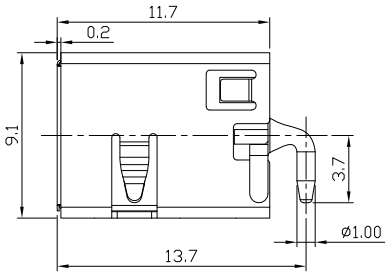

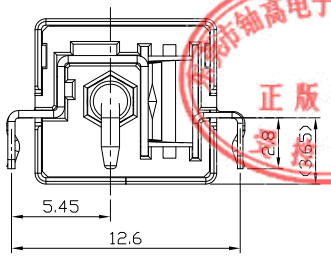

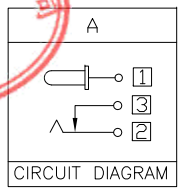

CIRCUIT DIAGRAM

Model No.	G	H	J
CENTER PIN	Ø1.65	Ø2.0	Ø2.5

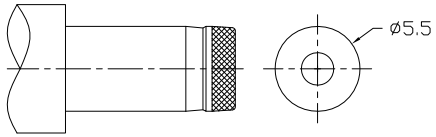

DC MATE PLUG

东莞市铀高电子制品有限公司
正版认证文件

○: ITEM NO. □: TERMINAL NO.

NO.	PARTS	MATERIAL	Q'TY	FINISHING
⑦	Ground terminal	Stainless steel, t0.1	1	
⑥	Shield	Brass, t0.35	1	Nickel plating
⑤	Terminal	Brass, t0.4	1	
④	Shunt terminal 3	Brass, t0.4	1	Silver plating
③	Tip spring 2	Phosphor bronze, t0.3	1	Silver plating
②	Center pin 1	Zinc alloy	1	Nickel plating
①	Housing	PA9T,PA10T UL94V-0	1	Black

TOLERANCE	ANGLES
±0.3	±2°

THESE DRAWINGS AND SPECIFICATIONS ARE THE PROPERTY OF ACCURATE INNOTECH INC AND SHALL NOT BE REPRODUCED, COPIED OR USED IN ANY MANNER WITHOUT THE PRIOR WRITTEN CONSENT OF ACCURATE INNOTECH INC.

UNITS mm
MAT'L SEE NOTE
FINISH SEE NOTE
Q'TY

东莞市铀高电子制品有限公司

TITLE: SMD DC POWER JACK	PART NO.: DCB0-0116A
DR: Ricky 2018/06/27	DWG NO.: AB0-0116A
CHKD: Ricky 2018/06/27	SCALE 1:1 / SHEET 1/1 / REV. A / CUSTOMER DRAWING
APPD:	