Process Capable

RoHS Compliant 2002/95/EC

REV.	ECN. NO.	APPD.

DIMENSIONS

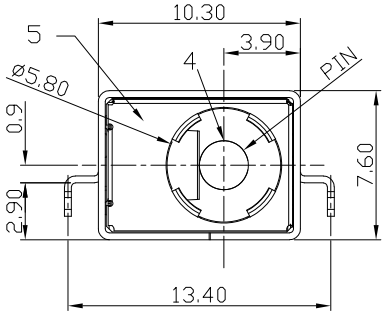

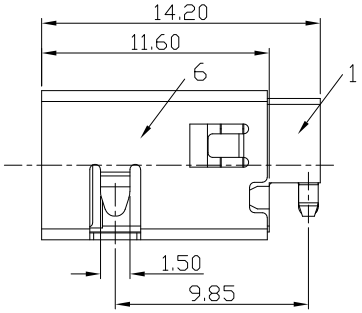

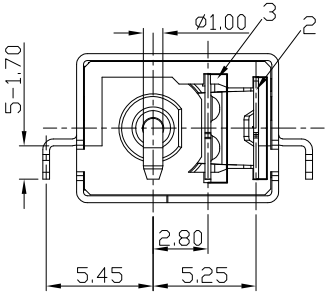

MODEL CODE:

DCS0-3017B- A □ LC BK S 0 1

(1) (2) (3)(4)(5)(6) (7)(8) (9)

(1):Series type:SMD DC POWER JACK.
(2):Series No.
(3):Schematic option: A
(4):Center pin diameter:
H=ø2.0mm , J=ø2.5mm
(5):Material of housing:
LC=LCP
(6):Housing color:
BK=Black
(7):Terminal plating
S=Silver(Ag)
(8):Special option:
0=No special option
(9):Packing mode:
1=Reel packing

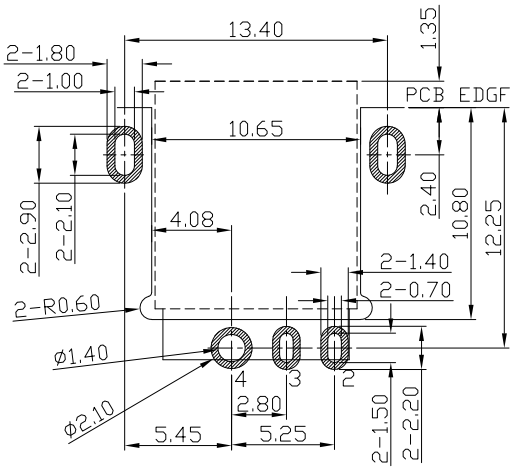

RECOMMEND P.C.B LAYOUT
TOP VIEW (TOLERANCES:0.05)

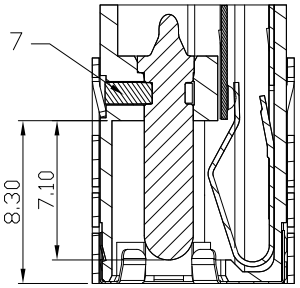

Specification:
1.Rating :DC 24V 10A.
2.Contact resistance : ≤30mΩ.
3.Insulation resistance : ≥100MΩ (DC500V).
4.Withstanding voltage: 500VAC .
5.Insertion and extraction force: 3~30N.
6.life test: 5000cycles min.
7.Operation temperature range:-25°C~85°C

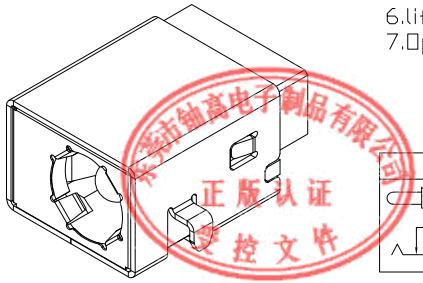

东莞市铀高电子制品有限公司 正版认证 受控文件

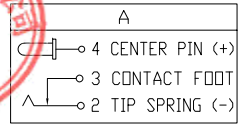

Model No.	H	J
CENTER PIN	ø2.0	ø2.5

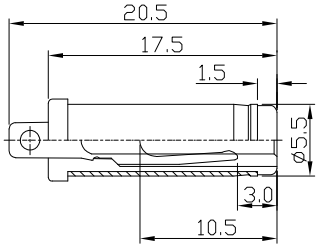

DC MATE PLUG

Bill of materials:

NO.	PARTS	MATERIAL	Q'TY	FINISHING
7	STOPPER	SUS301 t=0.3mm	1	
6	SHELL	BRASS t=0.35mm	1	Ni=60U"
5	GROUND	SUS301 t=0.10mm	1	N/A
4	PIN	BRASS	1	1st Ni=50U"2nd Ag=1U"
3	CONTACT FOOT	BRASS t=0.30	1	1st Ni=50U"2nd Ag=20U"
2	SPRING	BRONZE t=0.3mm	1	1st Ni=50U"2nd Ag=20U"
1	HOUSING	LCP UL 94V-0	1	BLACK

TOLERANCE	ANGLES
.X ± 0.3	X°.±5°
.XX ± 0.3	.X°±3°

THESE DRAWINGS AND SPECIFICATIONS ARE THE PROPERTY OF ACCURATE INNOTECH INC AND SHALL NOT BE REPRODUCED, COPIED OR USED IN ANY MANNER WITHOUT THE PRIOR WRITTEN CONSENT OF ACCURATE INNOTECH INC.

UNITS mm
MAT'L SEE NOTE
FINISH SEE NOTE
Q'TY

东莞市铀高电子制品有限公司

TITLE: SMD DC POWER JACK	PART NO.: DCS0-3017B
DR: Ricky 2019/03/26	DWG NO.: ASS-3017B
CHKD: Ricky 2019/03/26	SCALE 1:1 / SHEET 1/1 / REV. A / CUSTOMER DRAWING
APPD:	