Pb Process Capable

RoHS Compliant 2002/95/EC

| REV. | ECN. NO. | APPD. |
|---|---|---|
| | | |
| | | |
| | | |

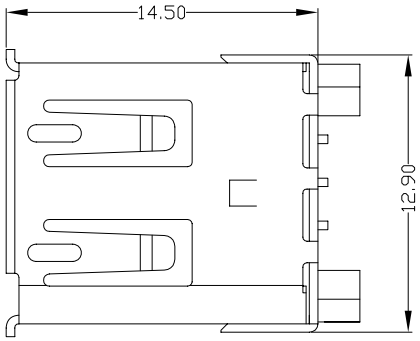


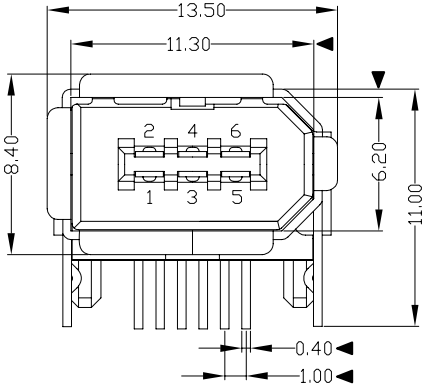


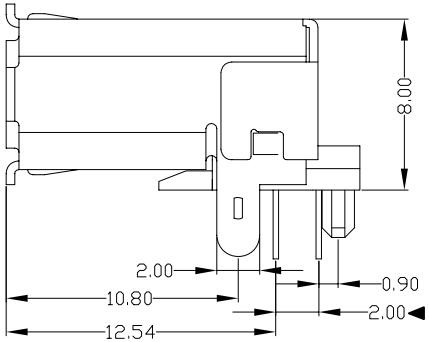


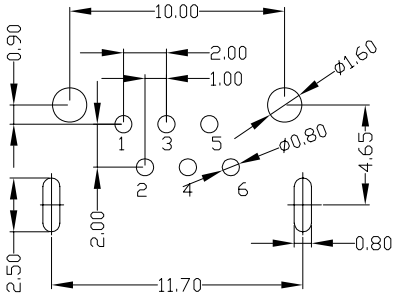


RECOMMENDED PCB LAYOUT

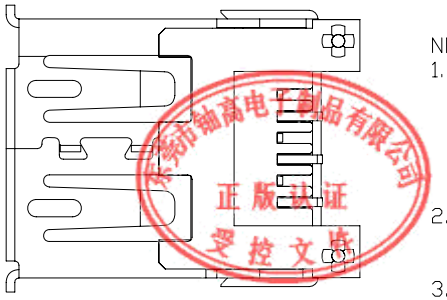

东莞市铀高电子制品有限公司 正版认证 受控文件

NOTES:

1. ELECTRICAL:
   1) VOLTAGE CURRENT RATING: 1AMP,30V AC;
   2) INSULATION RESISTANCE: 100MΩ MIN;
   3) CONTACT RESISTANCE: 50mΩ MAX;
   4) WITHSTANDING VOLTAGE: 300V AC;
   5) OPERATING TEMPERATURE:-55°C TO +85°C.
2. Mechanical:
   1) Mating Force: 30N MAX
   2) Unmating Force: 7N MIN.
3. DIMENSIONS MARKED "▼" TO BE CHECKED BY Q.C & IPQC.

4.PART NO.

IENF-06✱N-4✱R80

- 1:Au 1U"
- 6:Au 30U"
- W:WHITE
- B:BLACK
- 1:PBT
- 2:PA6T
- 3:PA9T
- 4:LCP

Bill of materials:

| NO | PARTS | MATERIAL | QTY | FINISHING |
|---|---|---|---|---|
| 3 | HOUSING | LCP | 1 | UL94V-0 |
| 2 | SHELL | COPPER ALLOY | 1 | PLATED NICKEL |
| 1 | TERMINAL | COPPER ALLOY | 6 | PLATED GOLD/TIN |

| | | | |
|---|---|---|---|
| X. ±0.35 | X.° ±2° | UNITS | mm |
| .X ±0.3 | .X° ±1° | MAT'L | SEE NOTE |
| .XX ±0.25 | .XX° | FINISH | SEE NOTE |
| .XXX ±0.15 | .XXX° | Q'TY | |

THESE DRAWINGS AND SPECIFICATIONS ARE THE PROPERTY OF ACCURATE INNOTECH INC .AND SHALL NOT BE REPRODUCED. COPIED OR USED IN ANY MANNER WITHOUT THE PRIOR WRITTEN CONSENT OF ACCURATE INNOTECH INC.

东莞市铀高电子制品有限公司

| | |
|---|---|
| TITLE: IEEE 1394 6P/F DIP | PART NO.: IENF-06✱N-4✱R80 |
| DR: gan 2012/07/02 | DWG NO.: AII-R80 |
| CHKD: gan 2012/07/02 | SCALE 1:1 / SHEET 1/1 / REV. B / CUSTOMER DRAWING |
| APPD: | |