REV	LTR	DESCRIPTION	DATE	REVISER	APPD

RoHS Compliant 2002/95/EC

Process Capable

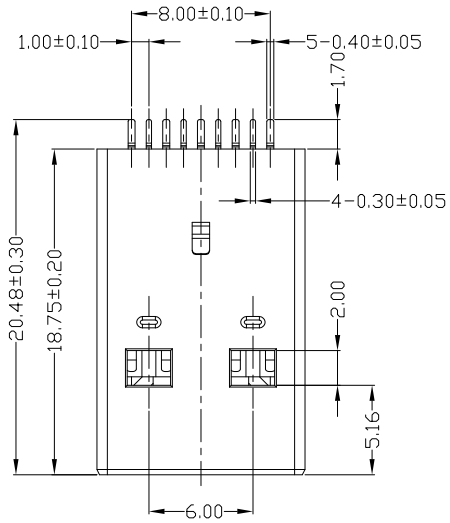

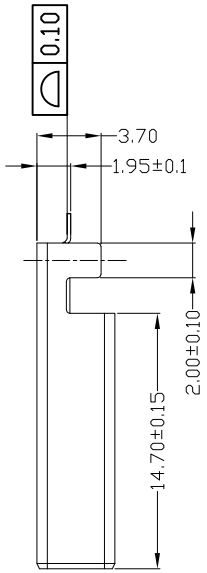

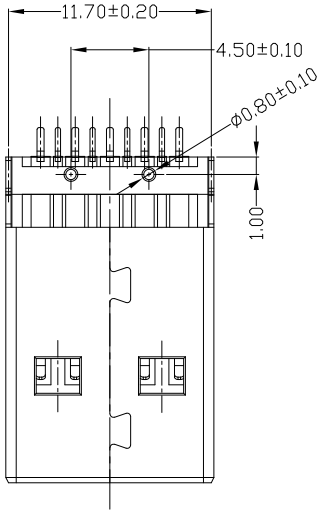

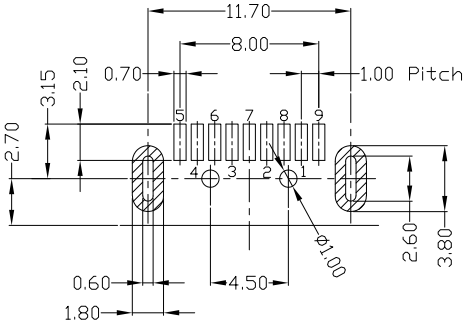

RECOMMENDED P.C.B LAYOUT

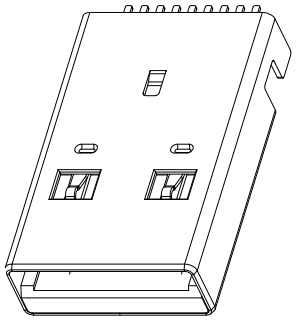

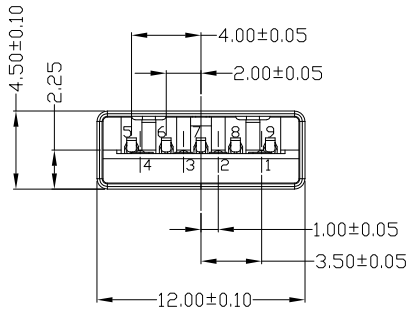

东莞市铀高电子制品有限公司
正版认证
受控文件

NOTES:

1.ELECTRICAL:
1)VOLTAGE CURRENT RATING:1.5AMP,30V AC;
2)INSULATION RESISTANCE: 100MΩ MIN;
3)CONTACT RESISTANCE: 30mΩ MAX;
4)WITHSTANDING VOLTAGE: 500V AC;
5)OPERATING TEMPERATURE:-55°C TO +85°C.

2.Mechanical:
1)Mating Force: 35N MAX
2)Unmating Force: 10N MIN.

3.DIMENSIONS MARKED "▼"
TO BE CHECKED BY Q.C & IPQC.

4. PART NO.
USAM-09*N-4BLVU31
1:Au 1U"
5:Au 15U"
6:Au 30U"
W:WHITE
B:BLACK
BL:BLUE
1:PBT
2:PA6T
3:PA9T
4:LCP

Bill of materials:

NO	PARTS	MATERIAL	QTY	FINISHING
3	HOUSING	LCP+30%GF	1	PLATED NICKEL
2	SHELL	SPCC	1	UL94V-0
1	TERMINAL	COPPER ALLOY	9	PLATED GOLD/TIN

X. ±0.35	X.° ±2°
.X ±0.3	.X° ±1°
.XX ±0.25	.XX°
.XXX ±0.15	.XXX°

UNITS mm
MAT'L SEE NOTE
FINISH SEE NOTE
Q'TY

THESE DRAWINGS AND SPECIFICATIONS ARE THE PROPERTY OF ACCURATE INNOTECH INC.
AND SHALL NOT BE REPRODUCED, COPIED OR USED IN ANY MANNER WITHOUT THE PRIOR WRITTEN CONSENT OF ACCURATE INNOTECH INC

东莞市铀高电子制品有限公司

TITLE: USB AM 3.0 L=18.7MM 沉板1.9MM 有柱(外壳脚长3.70MM)锡脚1.7

PART NO.: USAM-09XN-4BLVU31

DR: Ricky 2019/2/18

DWG NO.: AII-VU31

CHKD: Ricky 2019/2/18

APPD:

SCALE	SHEET	REV.	CUSTOMER DRAWING
1:1	1/1	B	