Pb Process Capable

RoHS Compliant 2002/95/EC

REV.	ECN. NO.	APPD.

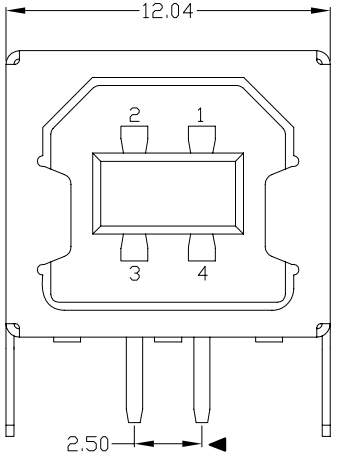

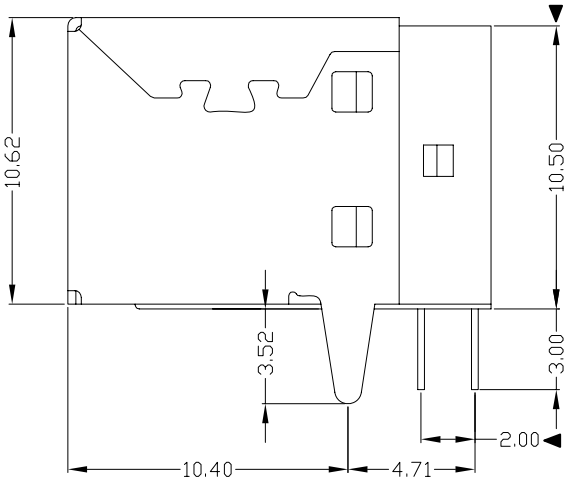

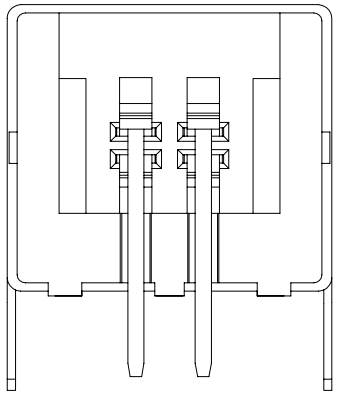

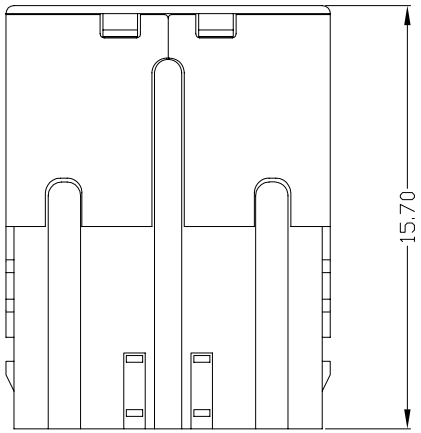

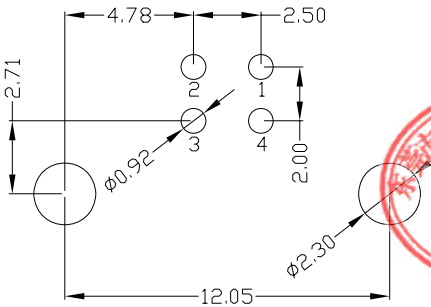

RECOMMENDED PCB LAYOUT

NOTES:

1. ELECTRICAL:
   1) VOLTAGE CURRENT RATING:2AMP,30V AC;
   2) INSULATION RESISTANCE: 1000MΩ MIN;
   3) CONTACT RESISTANCE: 30mΩ MAX;
   4) WITHSTANDING VOLTAGE: 500V AC;
   5) OPERATING TEMPERATURE:-55°C TO +85°C.
2. Mechanical:
   1) Mating Force: 35N MAX
   2) Unmating Force: 10N MIN.
3. NOTE:1.DIMENSIONS MARKED "▼" TO BE CHECKED BY Q.C & IPQC.
4. PART NO.

USBF-04*N-1*R80

- 1:Au 1U"
- 6:Au 30U"
- W:WHITE
- B:BLACK
- 1:PBT
- 2:PA6T
- 3:PA9T
- 4:LCP

东莞市铀高电子制品有限公司 正版认证 受控文件

Bill of materials:

NO	PARTS	MATERIAL	QTY	FINISHING
3	HOUSING	PBT	1	UL94V-0
2	SHELL	COPPER ALLOY	1	PLATED NICKEL
1	TERMINAL	COPPER ALLOY	4	PLATED GOLD/TIN

X. ±0.35	X.° ±2°
.X ±0.3	.X° ±1°
.XX ±0.25	.XX°
.XXX ±0.15	.XXX°

THESE DRAWINGS AND SPECIFICATIONS ARE THE PROPERTY OF ACCURATE INNOTECH INC .AND SHALL NOT BE REPRODUCED, COPIED OR USED IN ANY MANNER WITHOUT THE PRIOR WRITTEN CONSENT OF ACCURATE INNOTECH INC.

UNITS mm

MAT'L SEE NOTE

FINISH SEE NOTE

Q'TY

东莞市铀高电子制品有限公司

TITLE: USB B/F 90° DIP直脚(无后盖)

PART NO.: USBF-04*N-1*R80

DR: gan 2012/7/04

CHKD: gan 2012/7/04

APPD:

DWG NO.: AII-R80

SCALE	SHEET	REV.	
1:1	1/1	B	CUSTOMER DRAWING