Process Capable

RoHS Compliant 2002/95/EC

| REV. | ECN. NO. | APPD. |
|---|---|---|
| | | |
| | | |
| | | |

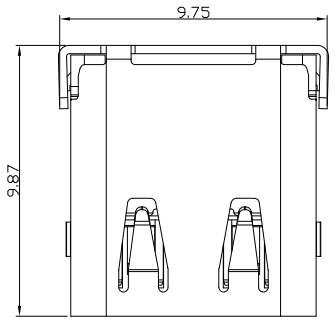


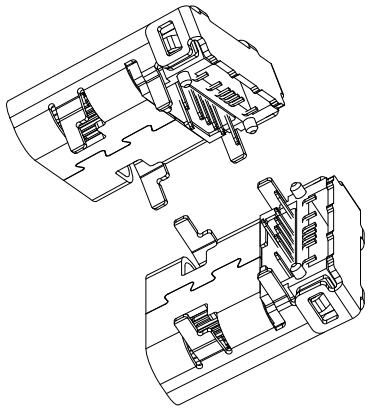

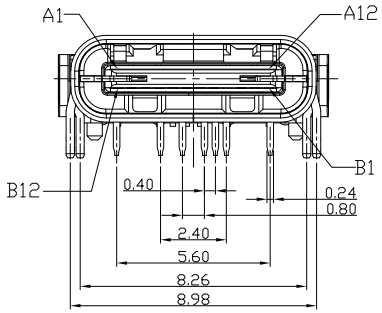


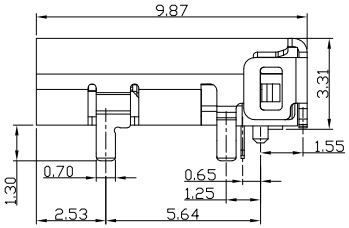


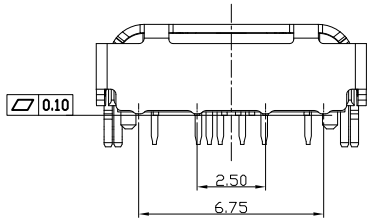


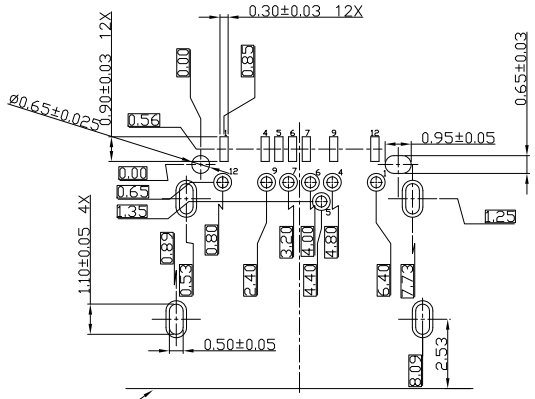


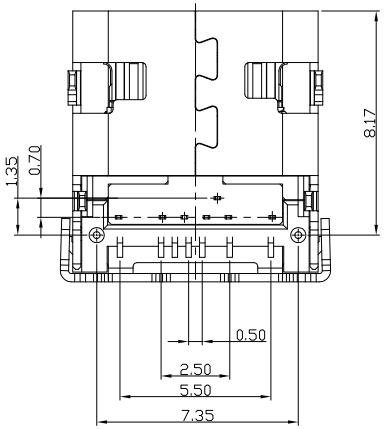


| | | | |
|---|---|---|---|
| A1 | GND | B12 | GND |
| A4 | VBUS | B9 | VBUS |
| A5 | CC1 | B7 | DN2 |
| A6 | DP1 | B6 | DP2 |
| A7 | DN1 | B5 | CC2 |
| A9 | VBUS | B4 | VBUS |
| A12 | GND | B1 | GND |
| PIN | SIGNAL NAME | PIN | SIGNAL NAME |

东莞市铀高电子制品有限公司
正版认证
受控文件

NOTES:
1. ELECTRICAL:
   1) CURRENT RATING: 3AMP MAX;
   2) INSULATION RESISTANCE: 100MΩ MIN;
   3) CONTACT RESISTANCE: 40mΩ MAX;
   4) WITHSTANDING VOLTAGE: 100V AC;
   5) OPERATING TEMPERATURE:-30°C TO +85°C.
2. Mechanical:
   1) Mating Force: 5N~20N
   2) Unmating Force: 8N~20N
   3) Durability: 10,000 cycles
3. DIMENSIONS MARKED "▼"
   TO BE CHECKED BY Q.C & IPQC.

4.PART NO.

USCF-14*N-4BVS20

W:WHITE
B:BLACK

1:Au 1U"
2:Au 3U"
5:Au 15u"
6:Au 30U"

1:PBT
2:PA6T
3:PA9T
4:LCP

| NO | PARTS | MATERIAL | QTY | FINISHING |
|---|---|---|---|---|
| 5 | SHELL | STAINLESS STEEL | 1 | PLATED NICKEL/TIN |
| 4 | SPRING | STAINLESS STEEL | 1 | |
| 3 | SHIELDING PLATE | STAINLESS STEEL | 1 | PLATED NICKEL |
| 2 | CONTACT | COPPER ALLOY | 14 | PLATED GOLD/NICKEL |
| 1 | HOUSING | LCP+30%GF | 1 | UL94V-0 |

| | |
|---|---|
| X. ±0.35 | X.° ±2° |
| .X ±0.30 | .X° ±1° |
| .XX ±0.20 | .XX° ±0.5° |
| .XXX ±0.10 | .XXX° |

UNITS mm

MAT'L SEE NOTE

FINISH SEE NOTE

Q'TY

THESE DRAWINGS AND SPECIFICATIONS ARE THE PROPERTY OF ACCURATE INNOTECH INC .AND SHALL NOT BE REPRODUCED. COPIED OR USED IN ANY MANNER WITHOUT THE PRIOR WRITTEN CONSENT OF ACCURATE INNOTECH INC

东莞市铀高电子制品有限公司

TITLE: USB C F 2.0 TYPE 14PIN DIP+SMT CONN

PART NO.: USCF-14XN-4BVS20

DR: Ricky 2017/11/9

DWG NO.: AII-VS20

CHKD: Ricky 2017/11/9

APPD:

| SCALE | SHEET | REV. | |
|---|---|---|---|
| 1:1 | 1/1 | B | CUSTOMER DRAWING |