Pb Process Capable

RoHS Compliant 2002/95/EC

REV.	ECN. NO.	APPD.

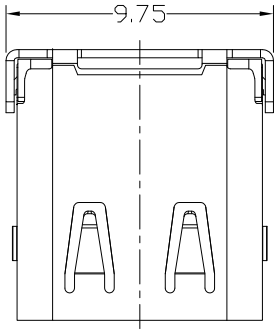

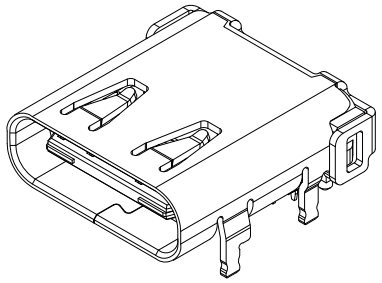

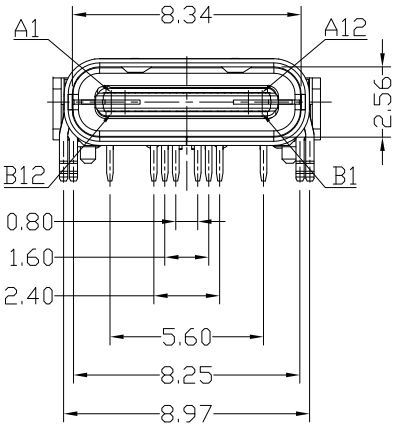

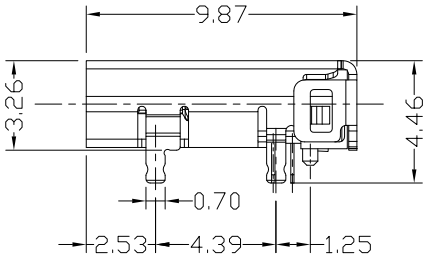

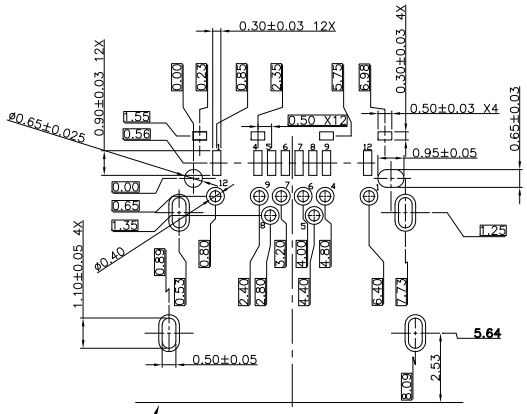

RECOMMENDED P.C.B. LAYOUT
TOLERANCE UNSPECIFIED ±0.05mm

CONNECTOR FRONT EDCE

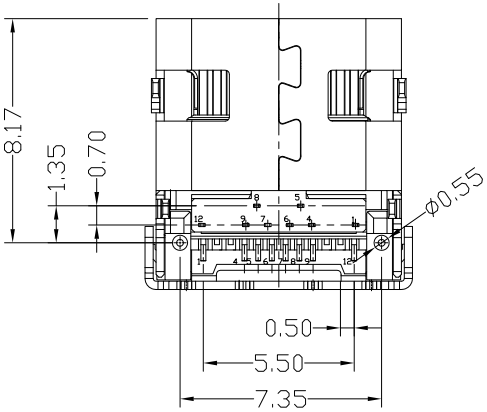

PIN	SIGNAL NAME	PIN	SIGNAL NAME
A1	GND	B12	GND
A4	VBUS	B9	VBUS
A5	CC1	B8	SBU2
A6	DP1	B7	DN2
A7	DN1	B6	DP2
A8	SBU1	B5	CC2
A9	VBUS	B4	VBUS
A12	GND	B1	GND

NOTES:
1. ELECTRICAL:
   1) CURRENT RATING: 3AMP MAX;
   2) INSULATION RESISTANCE: 100MΩ MIN 250V DC;
   3) CONTACT RESISTANCE: 30mΩ MAX;
   4) WITHSTANDING VOLTAGE: 250V AC;
   5) OPERATING TEMPERATURE:-30°C TO +80°C.
2. Mechanical:
   1) Mating Force: 35N MAX.
   2) Unmating Force: 10N MIN.
3. DIMENSIONS MARKED "▼"
   TO BE CHECKED BY Q.C & IPQC.

4.PART NO.

USCF-16*N-4BL60

- 1:Au 1U"
- 2:Au 3U"
- 5:Au 15u"
- 6:Au 30U"
- W:WHITE
- B:BLACK
- BL:BLUE
- 1:PBT
- 2:PA6T
- 3:PA9T
- 4:LCP

东莞市铀高电子制品有限公司 正版认证 受控文件

NO	PARTS	MATERIAL	QTY	FINISHING
5	SHRAPNEL	STAINLESS STEEL	2	
4	HOOK	STAINLESS STEEL	1	
3	SHELL	STAINLESS STEEL	1	PLATED NICKEL
2	TERMINAL	COPPER ALLOY	16	PLATED GOLD
1	HOUSING	LCP+30%GF	1	UL94V-0

.X ±0.30	.X° ±1°	UNITS mm	东莞市铀高电子制品有限公司
.XX ±0.20	.XX°	MAT'L SEE NOTE	TITLE: USB TYPE CF 前插后贴16P 板上型
.XXX ±0.10	.XXX°	FINISH SEE NOTE	PART NO.: USCF-16XN-4BLV60
		Q'TY	DR: Ricky 2017/12/12
			CHKD: Ricky 2017/12/12
			APPD:

THESE DRAWINGS AND SPECIFICATIONS ARE THE PROPERTY OF ACCURATE INNOTECH INC AND SHALL NOT BE REPRODUCED, COPIED OR USED IN ANY MANNER WITHOUT THE PRIOR WRITTEN CONSENT OF ACCURATE INNOTECH INC

DWG NO.:			
AII-V60			
SCALE	SHEET	REV.	CUSTOMER DRAWING
1:1	1/1	B	