Pb Process Capable

RoHS Compliant 2002/95/EC

REV.	ECN. NO.	APPD.

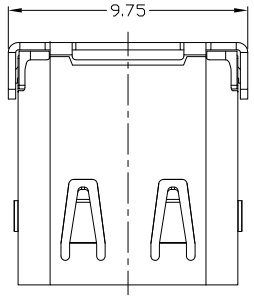

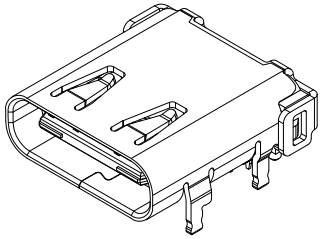

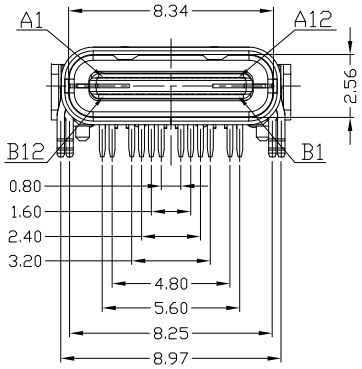

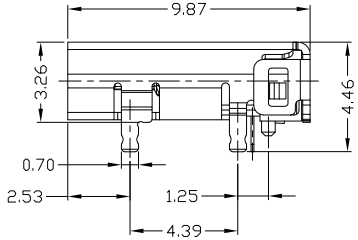

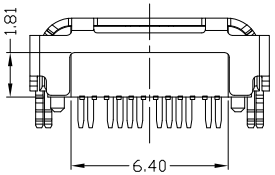

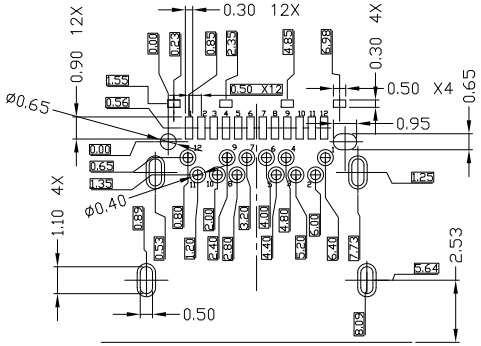

RECOMMENDED PCB LAYOUT

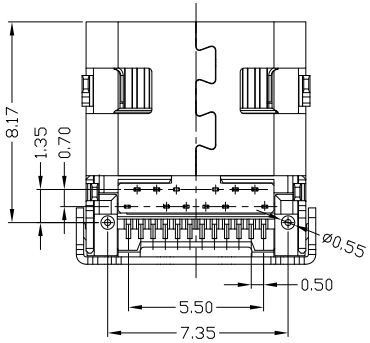

A1	GND	B12	GND
A2	SSTXP1	B11	SSRXP1
A3	SSTXN1	B10	SSRXN1
A4	VBUS	B9	VBUS
A5	CC1	B8	SBU2
A6	DP1	B7	DN2
A7	DN1	B6	DP2
A8	SBU1	B5	CC2
A9	VBUS	B4	VBUS
A10	SSRXN2	B3	SSTXN2
A11	SSRXP2	B2	SSTXP2
A12	GND	B1	GND
PIN	SIGNAL NAME	PIN	SIGNAL NAME

东莞市铀高电子制品有限公司
正版认证
受控文件

NOTES:

1. ELECTRICAL:
   1) CURRENT RATING:3AMP;
   2) INSULATION RESISTANCE: 100MΩMIN;
   3) CONTACT RESISTANCE: 30mΩMAX;
   4) WITHSTANDING VOLTAGE: 250V AC;
   5) OPERATING TEMPERATURE:-30°C TO +80°C.
2. Mechanical:
   1) Mating Force: 35N MAX
   2) Unmating Force: 10N MIN.
3. DIMENSIONS MARKED "▼" TO BE CHECKED BY Q.C & IPQC.
4. PART NO.

USCF-24*N-4BV61

W:WHITE
B:BLACK

1:Au 1U"
2:Au 3U"
5:Au 15U"
6:Au 30U"

1:PBT
2:PA6T
3:PA9T
4:LCP

Bill of materials:

NO	PARTS	MATERIAL	QTY	FINISHING
5	SHRAPNEL	STAINLESS STEEL	2	
4	HOOK	STAINLESS STEEL	1	
3	SHELL	STAINLESS STEEL	1	PLATED NICKEL
2	TERMINAL	COPPER ALLOY	24	PLATED GOLD
1	HOUSING	LCP+30%GF	1	UL94V-0

X. ±0.35	X.° ±2°	UNITS mm	
.X ±0.3	.X° ±1°	MAT'L SEE NOTE	
.XX ±0.25	.XX°		
.XXX ±0.15	.XXX°	FINISH SEE NOTE	
		Q'TY	

THESE DRAWINGS AND SPECIFICATIONS ARE THE PROPERTY OF ACCURATE INNOTECH INC AND SHALL NOT BE REPRODUCED, COPIED OR USED IN ANY MANNER WITHOUT THE PRIOR WRITTEN CONSENT OF ACCURATE INNOTECH INC.

东莞市铀高电子制品有限公司

TITLE: USB 3.1Type-C/F 前插后贴板上母座后盖有缺口成品	PART NO.: USCF-24*N-4BV61
DR: gan 2015/11/25	DWG NO.: AII-V61
CHKD: gan 2015/11/25	SCALE 1:1 / SHEET 1/1 / REV. B / CUSTOMER DRAWING
APPD:	