REV.	ECN. NO.	APPD.

Pb Process Capable

RoHS Compliant 2002/95/EC

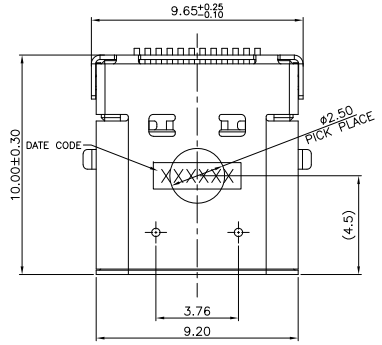

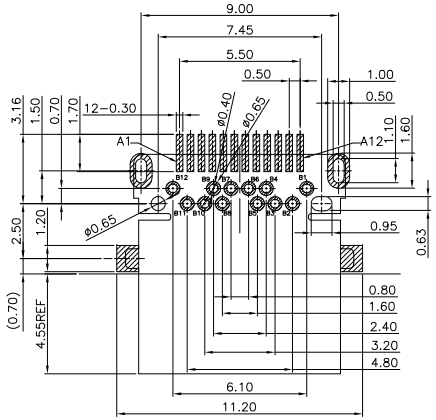

RECOMMEND P.C.B LAYOUT(COMPONENT SIDE)

TOLERANCE FOR PCB LAYOUT IS ± 0.05

KEEP OUT AREA

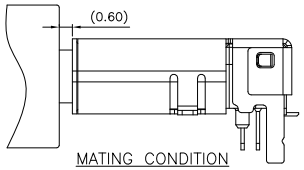

MATING CONDITION

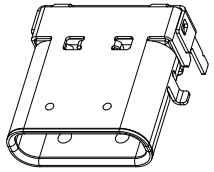

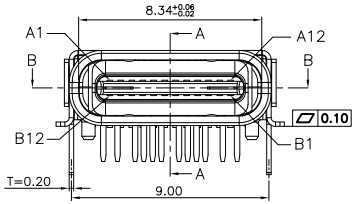

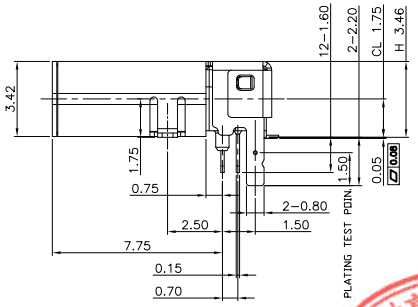

Pin	Signal Name	Mating Sequence	Pin	Signal Name	Mating Sequence
A1	GND	First	B12	GND	First
A2	SSTXp1	Second	B11	SSRXp1	Second
A3	SSTXn1	Second	B10	SSRXn1	Second
A4	VBUS	First	B9	VBUS	First
A5	CC1	Second	B8	SBU2	Second
A6	Dp1	Second	B7	Dn2	Second
A7	Dn1	Second	B6	Dp2	Second
A8	SBU1	Second	B5	CC2	Second
A9	VBUS	First	B4	VBUS	First
A10	SSRXn2	Second	B3	SSTXn2	Second
A11	SSRXp2	Second	B2	SSTXp2	Second
A12	GND	First	B1	GND	First
SHELL		GND	SHELL		GND

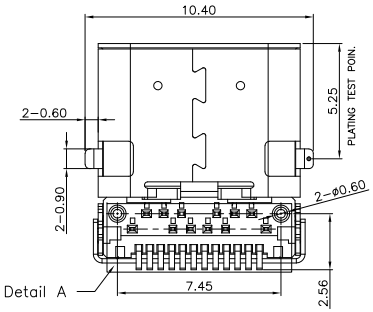

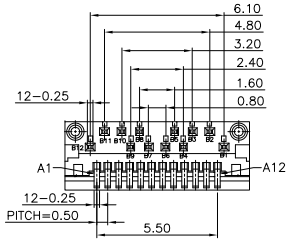

Detail A

东莞市铀高电子制品有限公司 正版认证 受控文件

NOTES:

1.ELECTRICAL CHARACTERISTICS:
 1)CURRENT RATING: 5A FOR COLLECTIVELY POWER SUPPLY PIN (PIN A1,A4,A9,A12,B1,B4,B9,B12); 1.25A FOR VCONN PIN; 0.25A FOR OTHER SIGNAL PIN.
 2)INSULATION RESISTANCE: 100MΩ Min
 3)CONTACT RESISTANCE: 40mΩ Max FOR INITIAL. 10mΩ CHANGE AFTER TEST. MEASURE AT 20mV, 100mA.
 4)WITHSTANDING VOLTAGE: 100V AC R.M.S.
 5)OPERATING TEMPERATURE: -40°C ~85°C
2.MECHANICAL CHARACTERISTICS:
 1)MATING FORCE: 5N~20N
 2)UNMATED FORCE: 8N~20N INITIAL TEST; 6N~20N DURABILITY AFTER TEST
 3)DURABILITY: 10,000 CYCLES
4.DIMENSIONS MARKED "▼" TO BE CHECKED BY Q.C & IPQC.

4.PART NO.

USCF-24*N-4BVL007

W:WHITE
B:BLACK

1:Au 1U"
2:Au 3U"
5:Au 15u"
6:Au 30U"

1:PBT
2:PA6T
3:PA9T
4:LCP

NO	PARTS	MATERIAL	QTY	FINISHING
6	MID PLATE	STAINLESS STEEL	1	
5	INNER GROUND COVER SHELL	STAINLESS STEEL	1	
4	COVER SHELL	COPPER ALLOY	1	PLATED NICKEL
3	SHELL	STAINLESS STEEL	1	PLATED NICKEL
2	CONTACT	COPPER ALLOY	24	PLATED GOLD/TIN
1	INSULATOR	LCP+30%GF	1	UL94V-0

X. ±0.50	ANGEL ±2°	UNITS	mm
.X ±0.30		MAT'L	SEE NOTE
.XX ±0.20		FINISH	SEE NOTE
.XXX ±0.10		Q'TY	

THESE DRAWINGS AND SPECIFICATIONS ARE THE PROPERTY OF ACCURATE INNOTECH INC .AND SHALL NOT BE REPRODUCED. COPIED OR USED IN ANY MANNER WITHOUT THE PRIOR WRITTEN CONSENT OF ACCURATE INNOTECH INC

东莞市铀高电子制品有限公司

TITLE: USB 3.1 CF STD CL1.75 H3.46mm L10.0mm 外壳前脚SMT		PART NO.: USCF-24XN-4BVL007	
DR: Ricky 2018/02/27		DWG NO.: AII-VL007	
CHKD: Ricky 2018/02/27		SCALE 1:1	SHEET 1/1	REV. B	CUSTOMER DRAWING
APPD:			