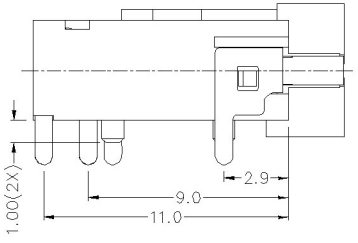

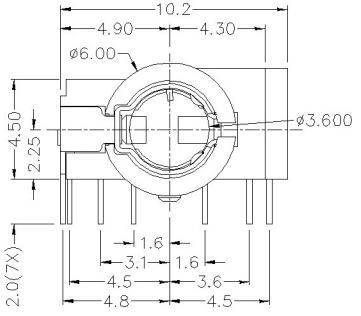

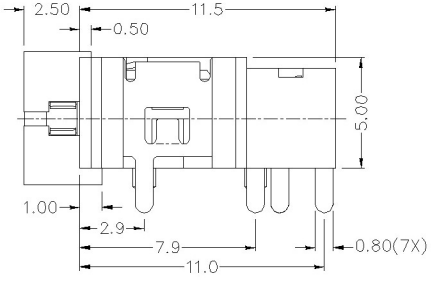

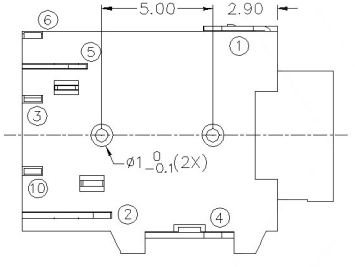

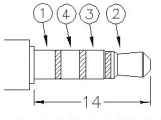

ø3.5 MATE PLUG

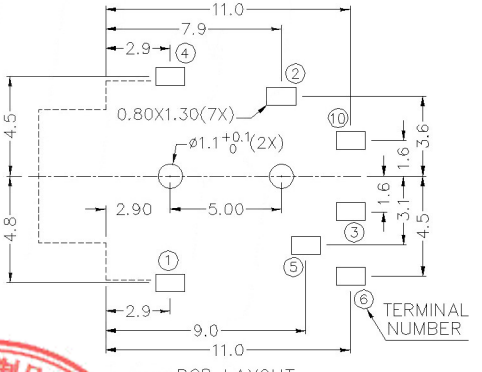

PCB LAYOUT
(BOTTOM VIEW)

MODEL NO.	PJ-3020	PJ-3021	PJ-3022	PJ-3023
SCHEMATIC	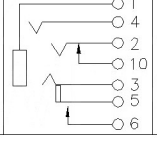	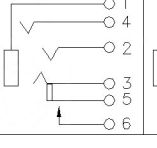	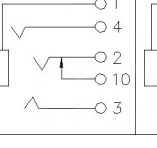	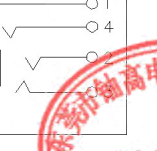

SPECIFICATION:
1. RATING:DC30V 0.5A;
2. CONTACT RESISTANCE:≤50mΩ;
   AFTER LIFE TEST:≤100mΩ;
3. INSULATION RESISTANCE:≥100MΩ(DC250V);
   AFTER LIFE TEST:≤50MΩ;
4. WITHSTAND VOLTAGE:500V AC ;
5. INSERTION AND EXTRACTION FORCE:3-30N;
6. LIFE TEST:5,000 CYCLES Min.

东莞市铀高电子制品有限公司
正版认证
受控文件

	MATERIAL	PLATING
terminal 1	Phosphor Bronze	silver
terminal 2	Phosphor Bronze	silver
terminal 3	Phosphor Bronze	silver
terminal 4	Phosphor Bronze	silver
terminal 5	Phosphor Bronze	silver
terminal 6	Phosphor Bronze	silver
terminal 10	Phosphor Bronze	silver
plastic	High Temp. Thermoplastic	

MARK	DESCRIPTION	DATE	REVISED	APPROVED
△X				
△X				
△X				

REVISIONS

ANGLAR	±5°
X.X	±0.2mm
X.XX	±0.1mm
X.XXX	±0.05mm

UNSPECIFIED TOLERANCES

DSND		DATE		SCALE: N/A	MODEL TYPE: 3.5 PHONE JACK
DWN		DATE		VIEW:	PART NO.:
CHKD		DATE		UNIT: mm	DWG NO.: PJ-302X
APPD		DATE		SIZE: A4	

东莞市铀高电子制品有限公司

WEIGHT	SHEET	REVISION
1.0g	1/1	A0