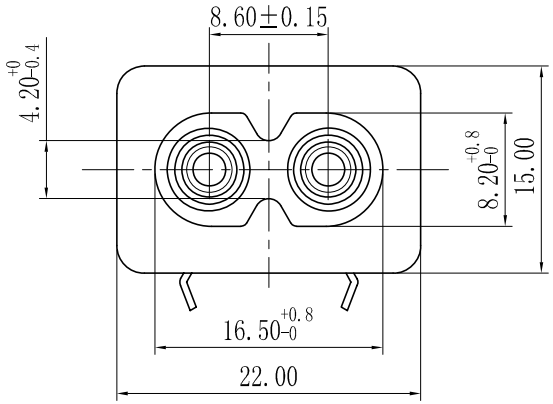

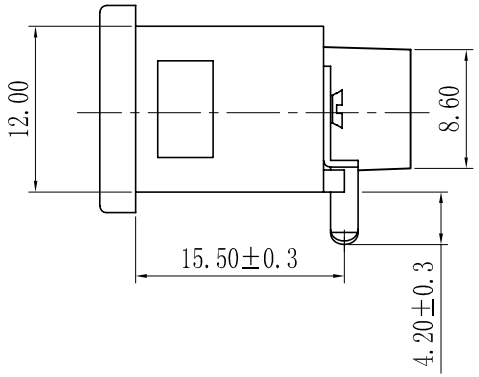

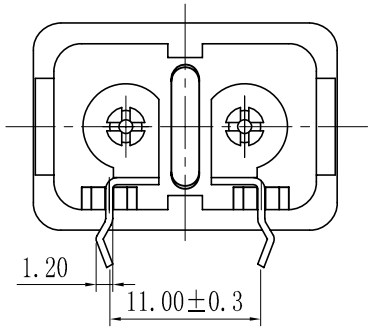

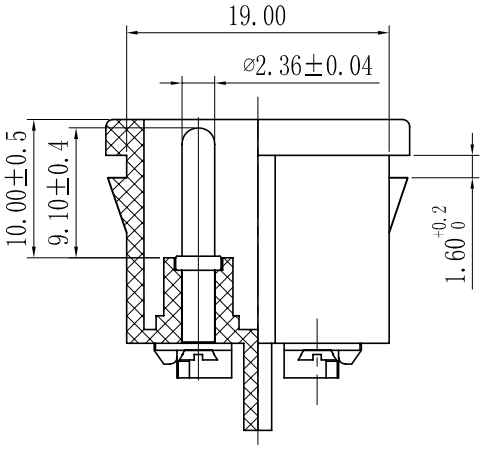

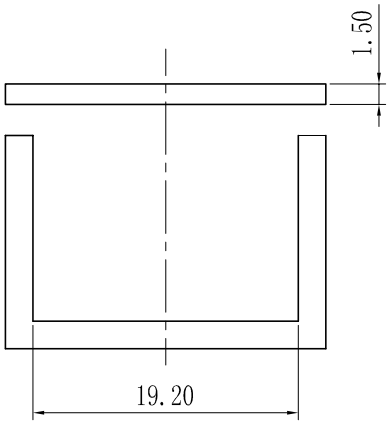

PANEL CUT-OUT

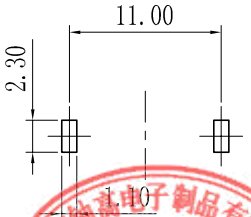

PCB LAYOUT

东莞市铀高电子制品有限公司
正版认证
受控文件

Rating :
5A 250V AC T105 UL cUL
2.5A 250V AC VDE 3C KC

Insert And Extract Force:	1.36kgf~6.8kgf
Terminal Strength:	≥80N
Operating Life:	≥5000 cycles
Withstand Voltage:	Between all terminals:2500VAC (50-60Hz)1min terminals to Base:3750V AC (50-60Hz)1min Leakage Current : 1mA
Insulation Resistance:	≥100MΩ 500V DC

A4			
A3			
A2			
A1			
REV.	DATE	REVISION DESCRIPTION	ISSUE

普通公差 COMMON TOLERANCE :	
UP TO 5	±0.20
ABOVE 5 TO 30	±0.30
ABOVE 30	±0.50
ANGULAR	±5°

单 位 UNIT	mm	投 影 PROJECTED		品 名 PRODUCT NAME	Ac Inlet C8型
绘 图 DRAWN BY	吴 瑜	核 对 CHECKED BY		型 号 MODEL NO.	YG-8-3P10
日 期 DATE	2011.09.28	核 准 APPROVAL BY		图 号 DWG NO.	83P10

东莞市铀高电子制品有限公司