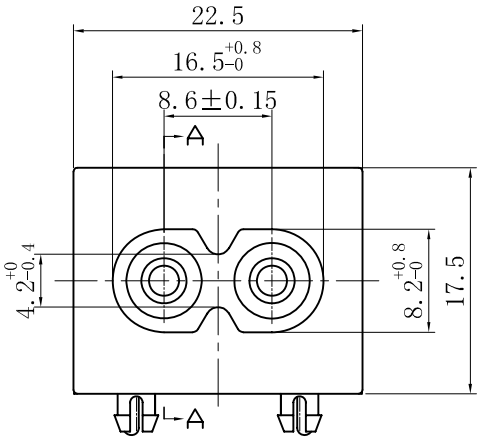

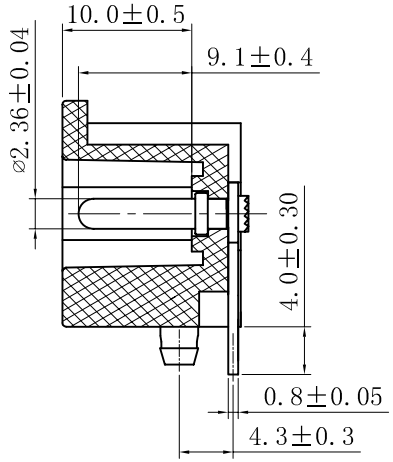

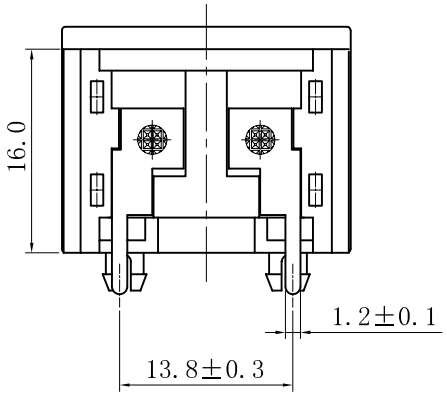

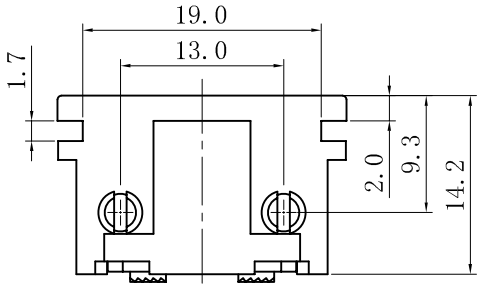

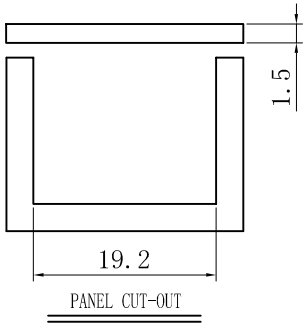

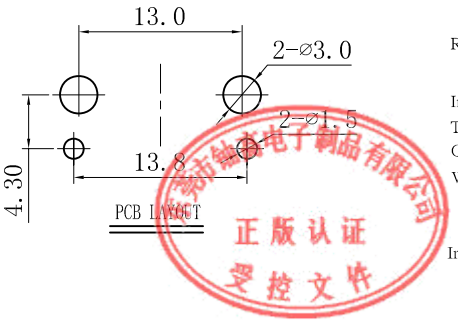

Rating :
5A 250V AC T105 UL cUL
2.5A 250V AC VDE 3C KC
Insert And Extract Force: 1.36kgf~6.8kgf
Terminal Strength: ≥80N
Operating Life: ≥5000 cycles
Withstand Voltage: Between all terminals:2500VAC (50-60Hz)1min
terminals to Base:3750V AC (50-60Hz)1min
Leakage Current : 1mA
Insulation Resistance: ≥100MΩ 500V DC

A4				普通公差 COMMON TOLERANCE				东莞市铀高电子制品有限公司			
A3											
A2				UP TO 5	±0.20	单位 UNIT	mm	投影 PROJECTED		品名 PRODUCT NAME	Ac Inlet C8型
A1				ABOVE 5 TO 30	±0.30	绘图 DRAWN BY	吴 瑜	核对 CHECKED BY		型号 MODEL NO.	YG-8-1MP13
				ABOVE 30	±0.50						
REV.	DATE	REVISION DESCRIPTION	ISSUE	ANGULAR	±5°	日期 DATE	2010.07.21	核准 APPROVAL BY		图号 DWG NO.	81MP13